DANA BREVINI®

Motion Systems

P.T.O. GEARBOXES

Technical Catalogue

January
2018

web edition

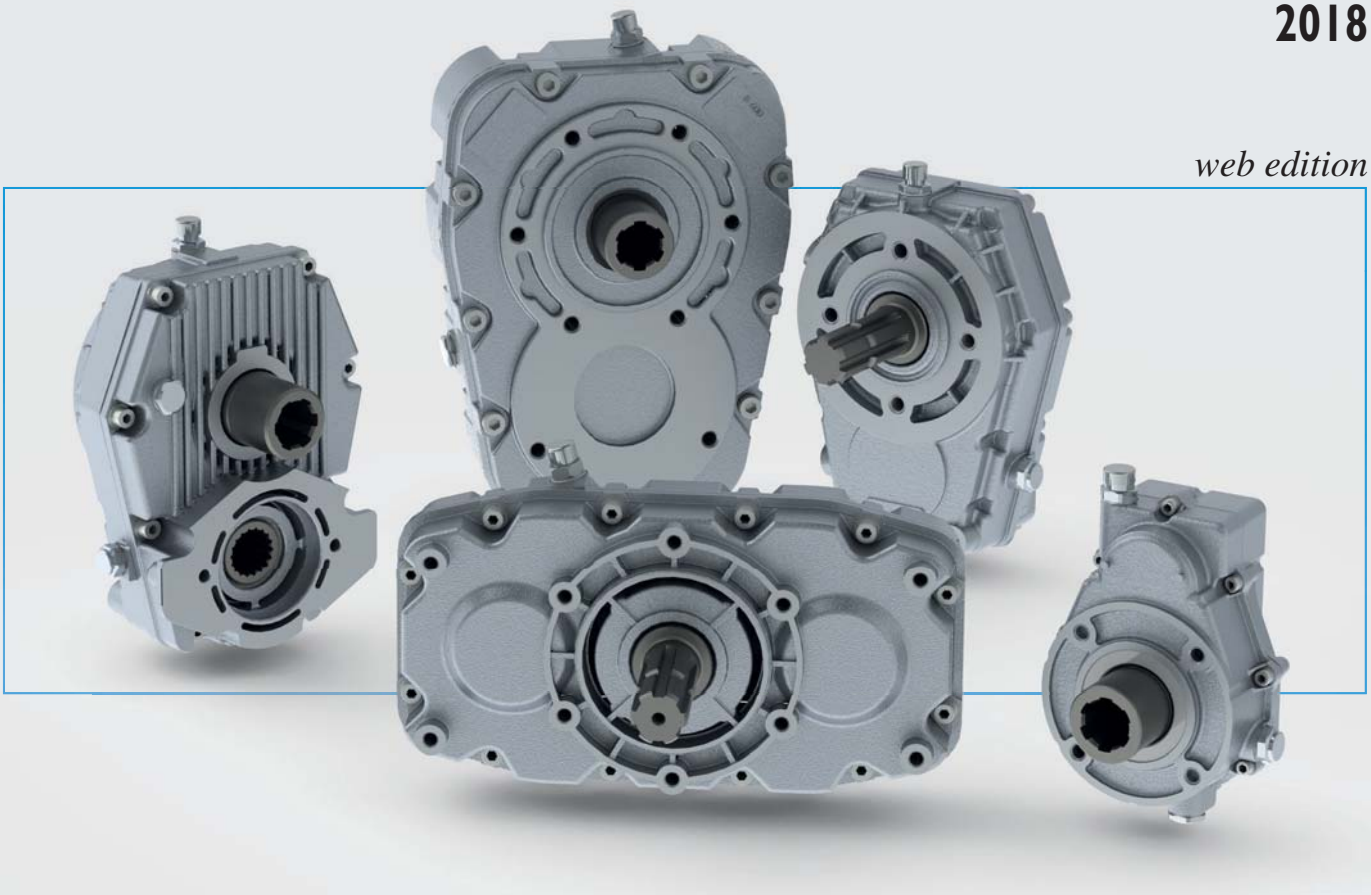

Table of contents

Introduction		2
ML32	Speed increaser gearbox for pumps GR.2 with European unified flange	4
ML52	Speed increaser gearbox for pumps GR.2/3 with European unified flange	6
ML52/SAE A-B	Speed increaser gearbox for pumps SAE A/B	8
ML52/B	Speed increaser gearbox with through-shaft for pumps GR.2/3 with European unified flange	10
B-585/A	Speed increaser gearbox for pumps SAE A	12
B-585/B	Speed increaser gearbox for pumps SAE B	14
B-585/P	Speed increaser gearbox for pumps GR.2 / 3	16
B-585/U	Speed increaser gearbox for universal flanges	18
B580	Speed increaser gearbox for pumps with European unified flange / SAE / ISO	20
B600	Speed increaser gearbox for pumps with European unified flange / SAE / ISO	22
B502	Splitter for pumps with European unified flange GR 2/3 - SAE A/B	24
B582	Splitter gearbox for pumps with European unified flange / SAE / ISO	26
B602	Splitter gearbox for pumps with European unified flange / SAE / ISO	28
Flanges	Flanges for speed increaser and pump drivers	30
RD33/SAE	Speed reducer gearbox SAE A	32
RD42/SAE	Speed reducer gearbox SAE A	34
RD52/SAE A-B	Speed reducer gearbox SAE A/B	36
RD62/SAE A-B	Speed reducer gearbox SAE A/B	38
RD62/B	Speed reducer gearbox with PTO for unified GR.2/3 pumps	40

© 2018 Dana Brevini S.p.A. all rights reserved. Hydr-App, SAM Hydraulik, Aron, Brevini Hydraulics, BPE Electronics, VPS Brevini, OT Oiltechnology, logos are trademarks or are registered trademarks of Dana Brevini S.p.A. or other companies Dana in Italy and other countries.

The technical features supplied in this catalogue are non binding and no legal action can be taken against such material. Dana Brevini will not be held responsible for information and specifications which may lead to error or incorrect interpretations. Given the continuous technical research aimed at improved technical features of our products, Dana Brevini reserves the right to make change that are considered appropriate without any prior notice. This catalogue cannot be reproduced (in while or in part) without the prior written consent of Dana Brevini. This catalogue supersedes all previous ones.

Use of the products in this catalogue must comply with the operating limits given in the technical specifications. The type of application and operating conditions must be assessed as normal or in malfunction in order to avoid endangering the safety of people and/or items.

GENERAL FEATURES

This catalog shows the characteristics of the gearboxes (speed increasers) ML and B series, and gearboxes (speed reducers) RD. Gearboxes are gerally used for the connection of hydraulic pump with low speed tractor power take-off.

Calculation for gears was done according to UNI ISO 6336.
Calculation for bearing was done according to ISO 281.

Operating temperature is between -20 °C to + 85 °C.

Materials used for the components of gear have been chosen according to the study of different requirements of resistance to stress and wear. In particular, the gears are made of hardened steel for high endurance. Housing and cover can be made both in aluminum alloy or cast iron, depending on the required code.

Assembly of gearbox must be performed referring to the position of the level indicator, oil drain and vent/fill plug.

Gearboxes have different attachment points that allow an integral attachment to the equipment or machine.

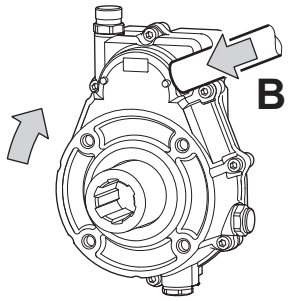

If it is not possible, gearboxes should be bound with a torque arm "B" (see figure). To avoid abnormal stress to the system, the torque arm "B" must be placed as close as possible to the mounting plane (PTO side) of gearbox.

Determination of the average duration of the gear
The duration of the gearboxes depends on the working conditions and the torques transmitted.

In the technical specifications of each gearbox is shown a graph that allows to verify their duration (in hours) as a function of transmitted average torque.

Graphs are output of standard calculations, they do not represent output of experimental tests, however they are a useful tool, as shown by experience achieved by our company in design and manufacture of geaboxes.

In the gearbox technical data table, we have 2 torque values.
Maximum starting torque (***C1***) and **maximum torque for continuous duty** (***C2***).

If gearbox works with torque values that do not exceed *C2*, the average torque ***Cm*** corresponds to value *C2* and duration of the gear is about 3500 hours. In mixed duty cycles, the transmitted torque can reach the limits of the maximum starting torque (***C1***).

A typical example of mixed duty cycle is shown in the following diagram:

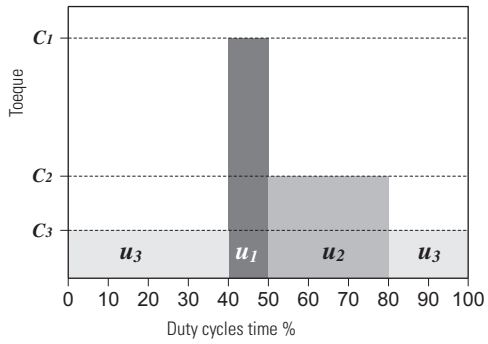

- 10% of the total time (*u1*) - *C1* torque;
- 30% of the total time (*u2*) - *C2* torque;
- 60% of the total time (*u3*) - *C3* torque.

In a mixed duty cycle the value of the average torque (***Cm***) can be calculated with a formula that takes into account the torques transmitted with different duty cycles (as required by standard).

$$C_m = \sqrt[3]{\frac{C_1^3 \cdot u_1 + C_2^3 \cdot u_2 + C_{..}^3 \cdot u_{..}}{(u_1 + u_2 + u_{..})}}$$

Where:
Cm = average torque (pump side);
C1 = maximum starting torque (pump side);
C2 = Maximum torque for continuous duty (pump side)
C.. = .. more torque (pump side)

u1 =% duty cycle - ***C1*** torque
u2 =% duty cycle - ***C2*** torque
u.. =% duty cycles - ***C..*** torque

GENERAL FEATURES

Example of calculation of gearboxes duration:
Speed increaser ML32 - transmission ratio 1: 2.5 - rpm 1000

Operating torque::	Duty cycles:
C_1 = 100 Nm	u_1 = 10%
C_2 = 65 Nm	u_2 = 30%
C_3 = 40 Nm	u_3 = 60%

$$Cm = \sqrt[3]{\frac{100^3 \cdot 10 + 65^3 \cdot 30 + 40^3 \cdot 60}{(10 + 30 + 60)}} = 60.4\ Nm$$

Input rpm		Output (transmission ratio) 1 : 1,5	1 : 2	1 : 2,5	1 : 3	1 : 3,5	1 : 3,8
540	curve	1	3	5	6	8	8
	rpm	810	1080	1350	1680	1836	2052
1000	curve	2	4	7	—	—	—
	rpm	1500	2000	2500	—	—	—

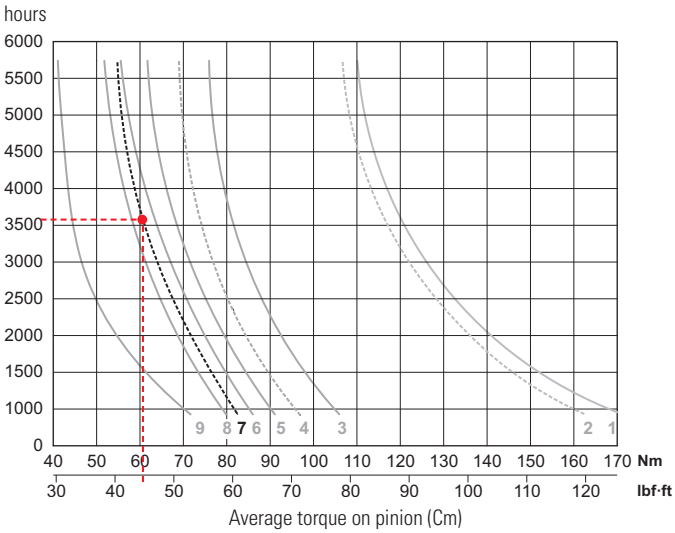

In diagram curve number **7** has to be considered (gear ratio **1: 2.5** at **1000 rpm**). The estimated duration of the average torque of **60.4 Nm** is approximately **3600 hours**.

Lubricating oil

The types of oil, in the following table, are those suggested for the correct lubrication of the gears and are differentiated according to the temperature at which gearboxes have to work.
For high torque, we recommend the use of oil type "EP (extreme pressure).

For features that are outside the range of proposed values, please contact our sales department.

LUBRICATING OIL IN FUNCTION OF THE SEASONAL TEMPERATURE

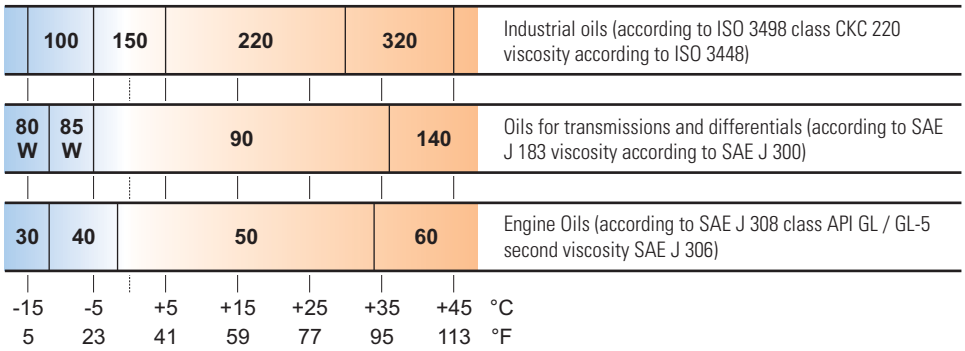

The gearboxes technical data shows the amount of oil for proper use. It is recommended to replace the lubricating oil after the first 50 hours of operation, after every 1000 hours or every 6 months.

SPEED INCREASER GEARBOX FOR PUMPS GR.2 WITH EUROPEAN UNIFIED FLANGE

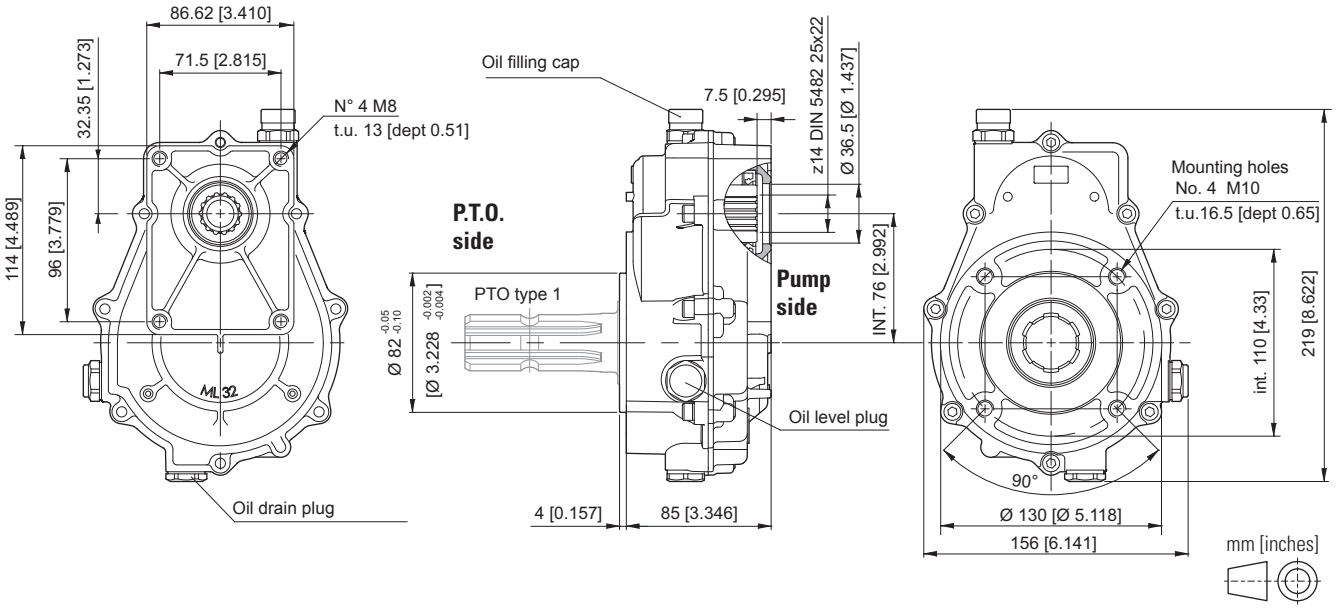

P.T.O.

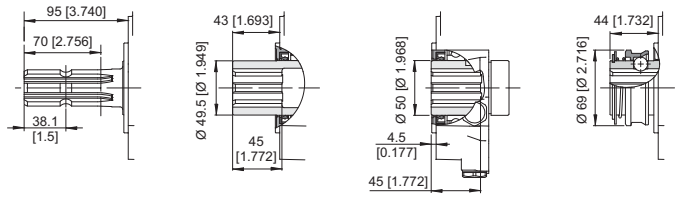

1 2-18 12 3-19

Mounting positions

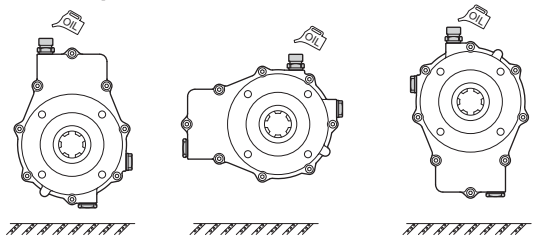

1 2 3

ORDERING CODE

ML32 - ** -1/ *** - *

ML32 = Speed increaser (aluminium body)

P.T.O.
1 = Male 1" 3/8 DIN 9611
2 = Female 1" 3/8 DIN 9611
3 = Female 1" 3/8 DIN 9611 + tightening
12 = Female 1" 3/8 DIN 9611 short
18 = Female z21 - 16/32 DIN 9611
19 = Female z21 - 16/32 DIN 9611 + tightening

Coupling for pump to be required to our sales department.

Mounting positions
1 / 2 / 3

Transmission ratio
1,5 = 1 : 1,5
2 = 1 : 2.0
2,5 = 1 : 2.5
3 = 1 : 3.0
3,5 = 1 : 3.5
3,8 = 1 : 3.8

TECHNICAL DATA

Transmission ratio	Maximum torque Nm [lbf·ft] 540 rpm C1*	540 rpm C2*	1000 rpm C1*	1000 rpm C2*	Weight kg [lb]
1 : 1.5	190 [140.1]	127 [93.7]	183 [135]	122 [90]	4,3 [9.5]
1 : 2.0	170 [125.4]	85 [62.7]	156 [115.1]	78 [57.5]	4,3 [9.5]
1 : 2.5	178 [131.3]	71 [52.4]	163 [120.2]	65 [47.9]	4,2 [9.3]
1 : 3.0	201 [148.2]	67 [49.4]	—	—	4,1 [9]
1 : 3.5	213 [157.1]	61 [45]	—	—	4 [8.8]
1 : 3.8	182 [134.2]	47 [34.7]	—	—	4 [8.8]

* Maximum torque on pump:
C1= maximum starting torque; C2= maximum torque for continuous duty.

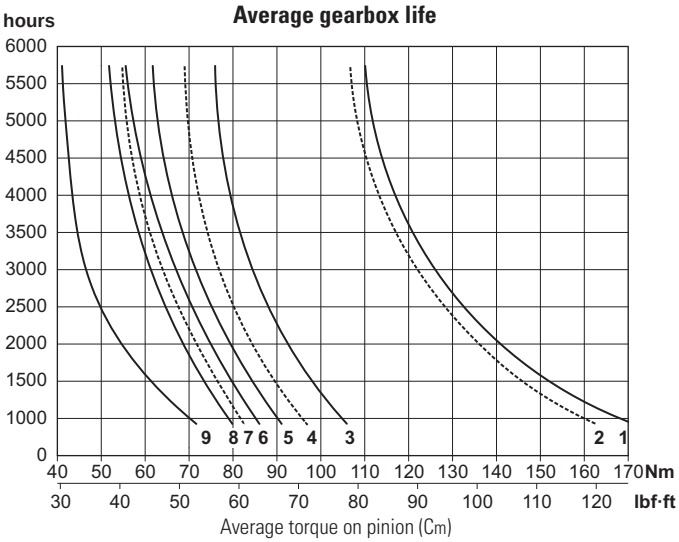

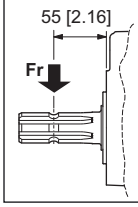

Fr: Maximum radial load on PTO

160 N
36 lbf

Mounting positions	Oil liters [US gallon]
1	0.15 [0.04]
2	0.11 [0.03]
3	0.09 [0.02]

Input rpm		Output (transmission ratio) 1 : 1.5	1 : 2.0	1 : 2.5	1 : 3.0	1 : 3.5	1 : 3.8
540	curve	1	3	5	6	8	8
	rpm	810	1080	1350	1680	1836	2052
1000	curve	2	4	7	—	—	—
	rpm	1500	2000	2500	—	—	—

SPARE PARTS

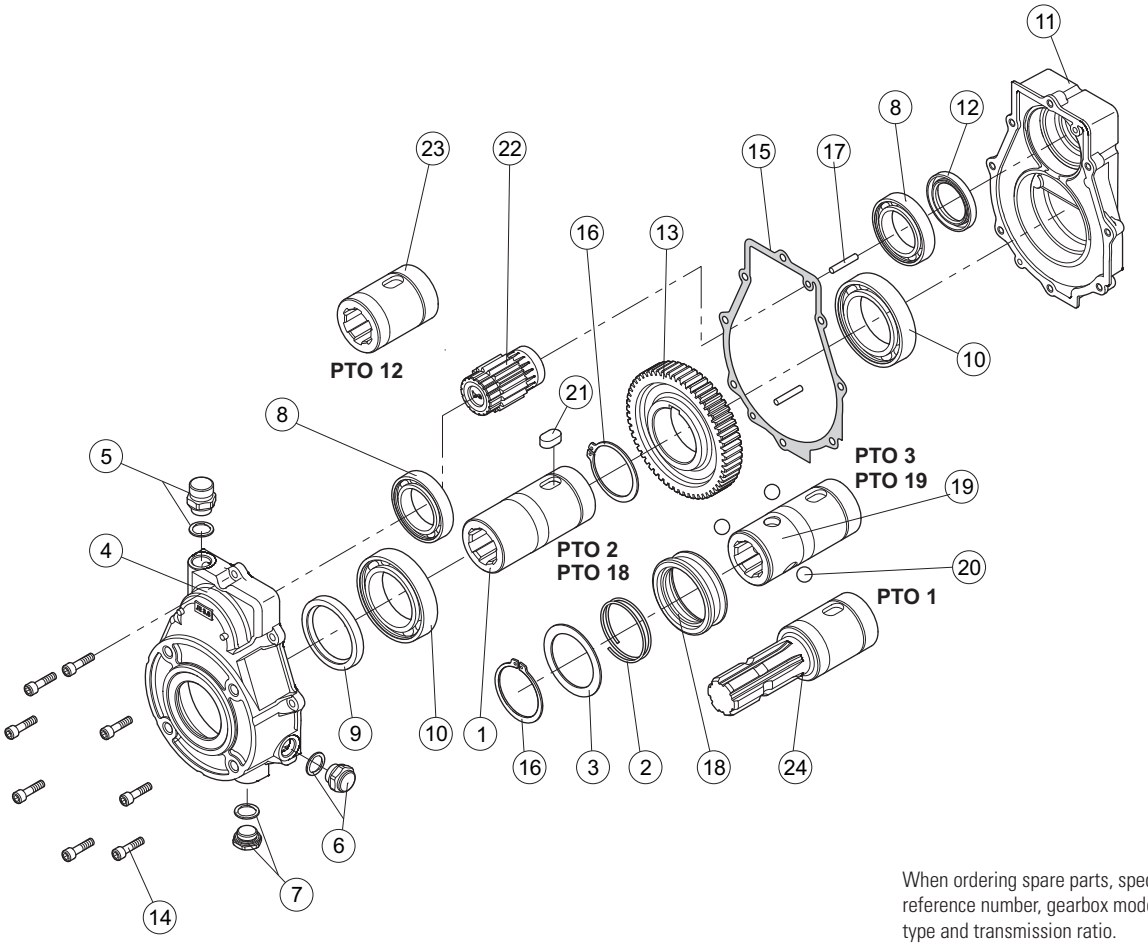

When ordering spare parts, specify reference number, gearbox model, PTO type and transmission ratio.

SPEED INCREASER GEARBOX FOR PUMPS GR.2/3 WITH EUROPEAN UNIFIED FLANGE

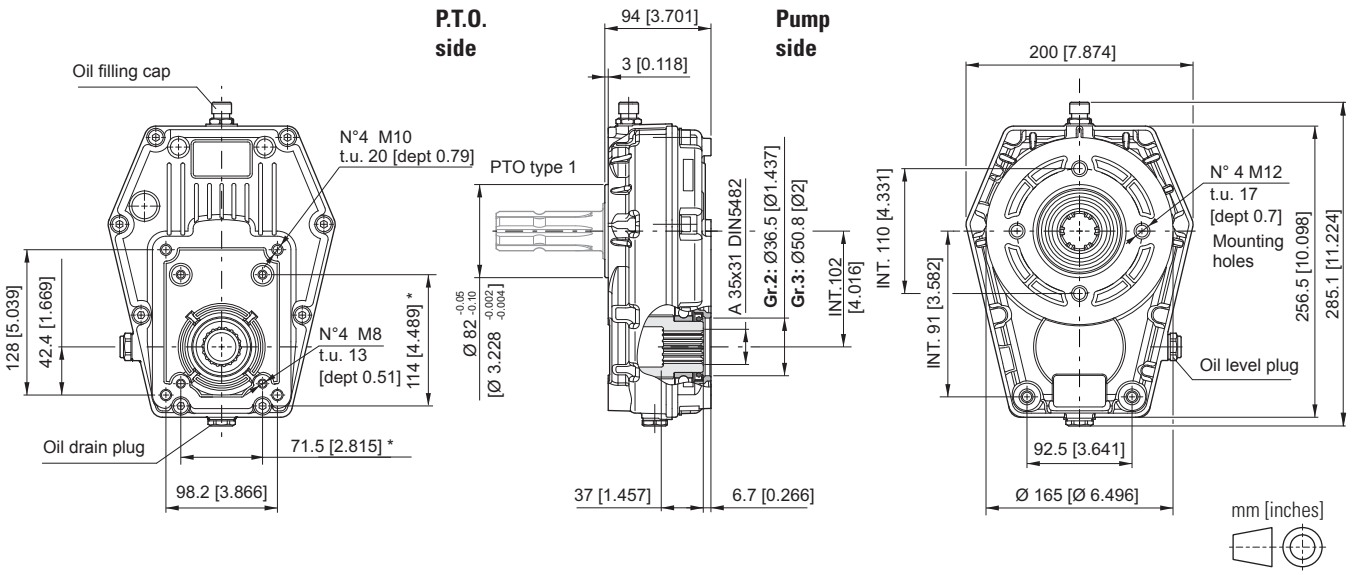

P.T.O.

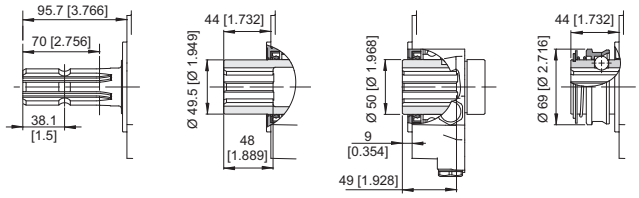

1 2-18 12 3-19

Mounting positions

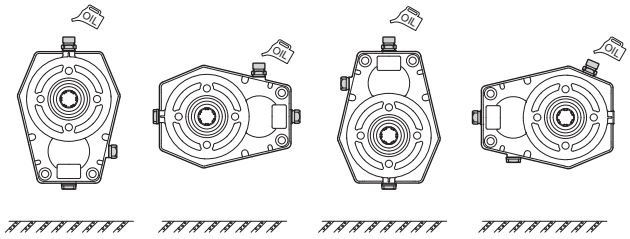

1 2 3 4

ORDERING CODE

ML52 - ** -1/ *** - * - *

ML52 = Speed increaser (aluminium body)

P.T.O.
1 = Male 1" 3/8 DIN 9611
2 = Female 1" 3/8 DIN 9611
3 = Female 1" 3/8 DIN 9611 + tightening
12 = Female 1" 3/8 DIN 9611 short
18 = Female z21 - 16/32 DIN 9611
19 = Female z21 - 16/32 DIN 9611 + tightening

Coupling for pump to be required to our sales department.

Flange
Omit for pumps GR.3
C = predisposition for pumps GR.2 - GR.3
S = SAE A - see page 30
T = SAE B - see page 30

Mounting positions
1 / 2 / 3 / 4

Transmission ratio
1 = 1 : 1.0
1,5 = 1 : 1.5
2 = 1 : 2.0
2,6 = 1 : 2.6
3 = 1 : 3.0
3,4 = 1 : 3.4
3,8 = 1 : 3.8

TECHNICAL DATA

Transmission ratio	Maximum torque Nm [lbf·ft] 540 rpm C1*	540 rpm C2*	1000 rpm C1*	1000 rpm C2*	Weight kg [lb]
1 : 1.0	604 [445]	318 [235]	585 [431]	308 [227]	9 [19.8]
1 : 1.5	486 [358]	256 [189]	467 [344]	246 [181]	8,4 [18.5]
1 : 2.0	414 [305]	218 [161]	395 [291]	208 [153]	8 [17.6]
1 : 2.6	339 [250]	178 [131]	319 [235]	168 [124]	7,9 [17.4]
1 : 3.0	306 [226]	161 [119]	—	—	7,7 [17]
1 : 3.4	253 [187]	133 [98]	—	—	8,1 [17.9]
1 : 3.8	231 [170]	122 [89]	—	—	8,1 [17.9]

* Maximum torque on pump:
C1= maximum starting torque; C2= maximum torque for continuous duty.

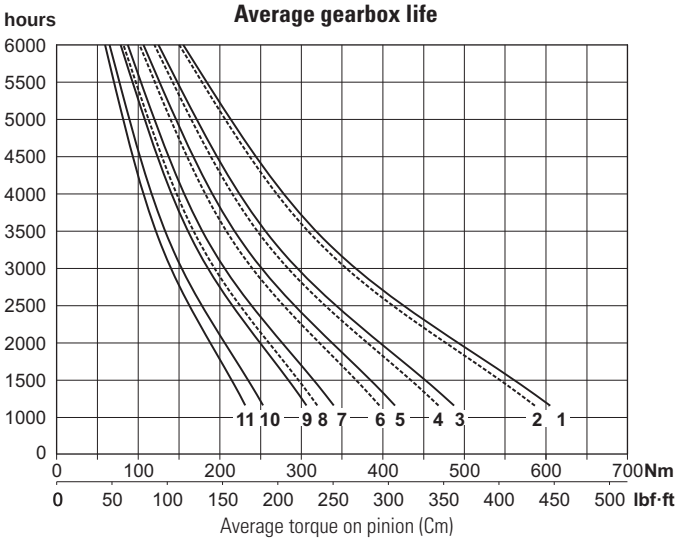

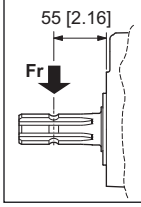

Fr: Maximum radial load on PTO

180 N
40.5 lbf

Mounting positions	Oil liters [US gallon]
1	0.34 [0.09]
2	0.80 [0.21]
3	0.52 [0.14]
4	0.75 [0.20]

Input rpm		Output (transmission ratio) 1 : 1.0	1 : 1.5	1 : 2.0	1 : 2.6	1 : 3.0	1 : 3.4	1 : 3.8
540	curve	1	3	5	7	9	10	11
	rpm	540	810	1080	1408	1620	1836	2057
1000	curve	2	4	6	8	—	—	—
	rpm	1000	1500	2000	2607	—	—	—

SPARE PARTS

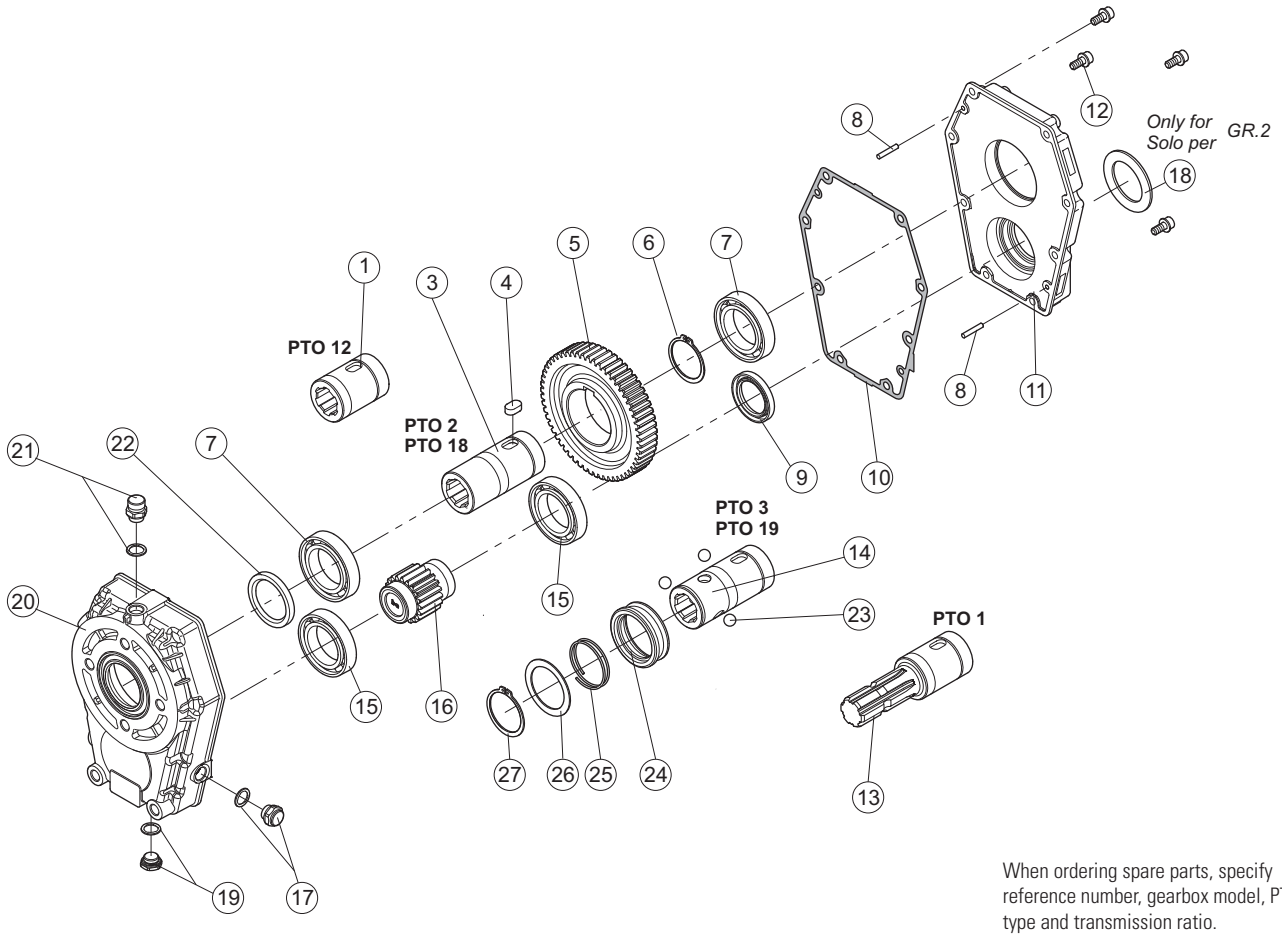

When ordering spare parts, specify reference number, gearbox model, PTO type and transmission ratio.

SPEED INCREASER GEARBOX FOR PUMPS SAE A/B

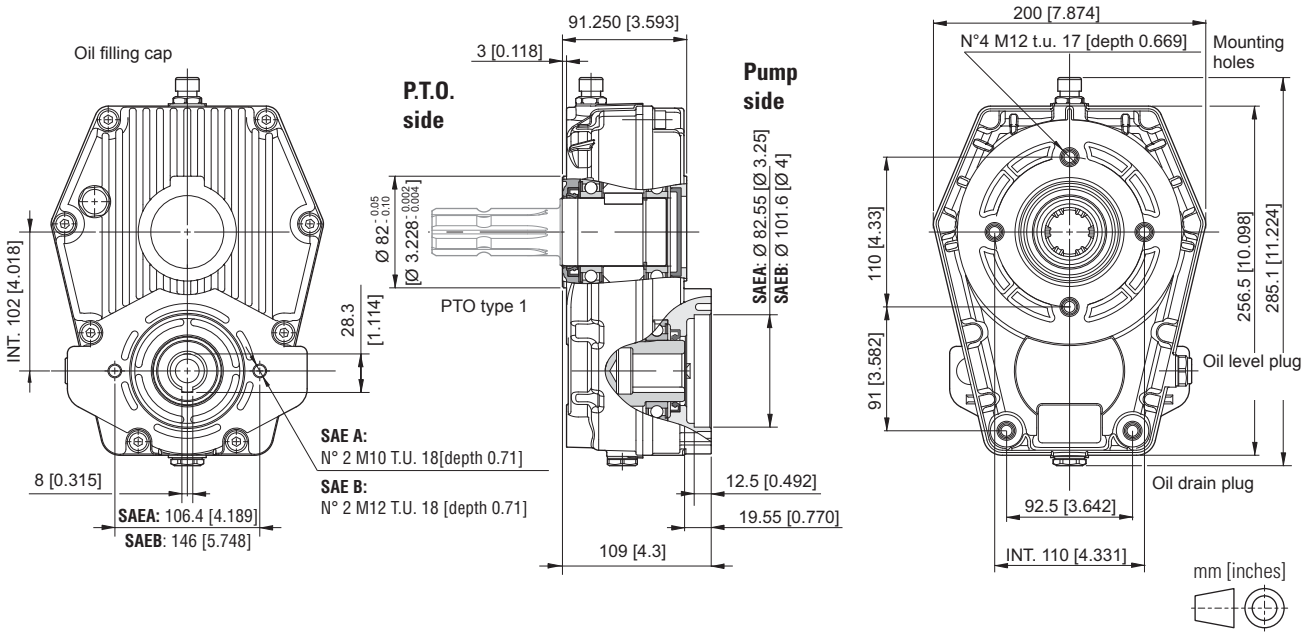

P.T.O.

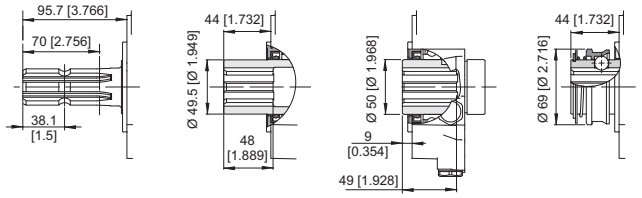

1 2-18 12 3-19

Mounting positions

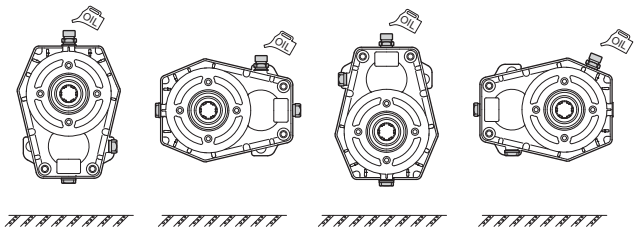

1 2 3 4

ORDERING CODE

ML52/SAE* - ** -1/ *** - ** - *

ML52/SAE A = Speed increaser (aluminium body)
ML52/SAE B = Speed increaser (aluminium body)

P.T.O.
1 = Male 1" 3/8 DIN 9611
2 = Female 1" 3/8 DIN 9611
3 = Female 1" 3/8 DIN 9611 + tightening
12 = Female 1" 3/8 DIN 9611 short
18 = Female z21 - 16/32 DIN 9611
19 = Female z21 - 16/32 DIN 9611 + tightening

Coupling for pump to be required to our sales department.

Mounting positions
1 / 2 / 3 / 4

Input shaft
9 = Female Ø 25
16 = Female Z18 DIN 5482 (35x31)

Transmission ratio
1 = 1 : 1.0
1,5 = 1 : 1.5
2 = 1 : 2.0
2,6 = 1 : 2.6
3 = 1 : 3.0
3,4 = 1 : 3.4
3,8 = 1 : 3.8

TECHNICAL DATA

Transmission ratio	Maximum torque Nm [lbf·ft] 540 rpm C1*	540 rpm C2*	1000 rpm C1*	1000 rpm C2*	Weight kg [lb]
1 : 1.0	604 [445]	318 [235]	585 [431]	308 [227]	9 [19.8]
1 : 1.5	486 [358]	256 [189]	467 [344]	246 [181]	8,4 [18.5]
1 : 2.0	414 [305]	218 [161]	395 [291]	208 [153]	8 [17.6]
1 : 2.6	339 [250]	178 [131]	319 [235]	168 [124]	7,9 [17.4]
1 : 3.0	306 [226]	161 [119]	—	—	7,7 [17]
1 : 3.4	253 [187]	133 [98]	—	—	8,1 [17.9]
1 : 3.8	231 [170]	122 [89]	—	—	8,1 [17.9]

* Maximum torque on pump:
C1= maximum starting torque; C2= maximum torque for continuous duty.

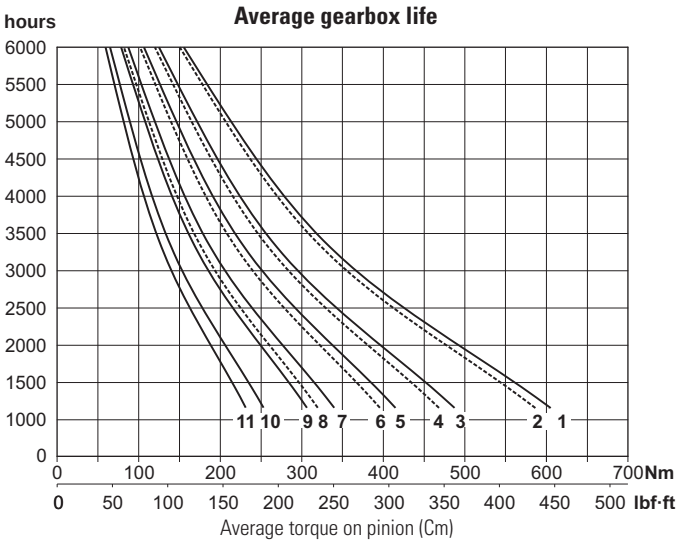

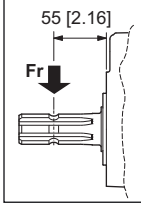

Fr: Maximum radial load on PTO

180 N
40.5 lbf

Mounting positions	Oil liters [US gallon]
1	0.34 [0.09]
2	0.80 [0.21]
3	0.52 [0.14]
4	0.75 [0.20]

Input rpm		Output (transmission ratio) 1 : 1.0	1 : 1.5	1 : 2.0	1 : 2.6	1 : 3.0	1 : 3.4	1 : 3.8
540	curve	1	3	5	7	9	10	11
	rpm	540	810	1080	1408	1620	1836	2057
1000	curve	2	4	6	8	—	—	—
	rpm	1000	1500	2000	2607	—	—	—

SPARE PARTS

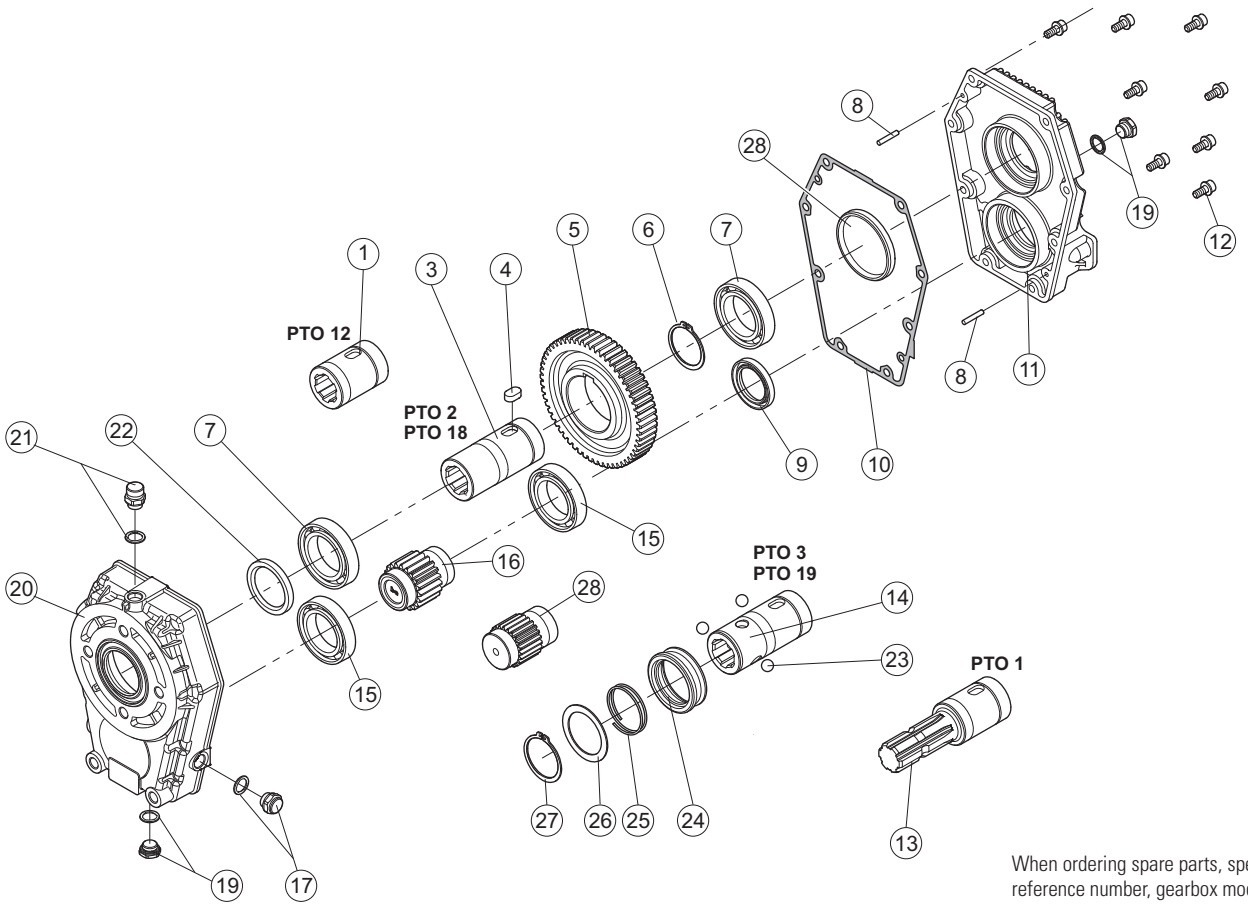

When ordering spare parts, specify reference number, gearbox model, PTO type and transmission ratio.

SPEED INCREASER GEARBOX WITH THROUGH-SHAFT FOR PUMPS GR.2/3 WITH EUROPEAN UNIFIED FLANGE

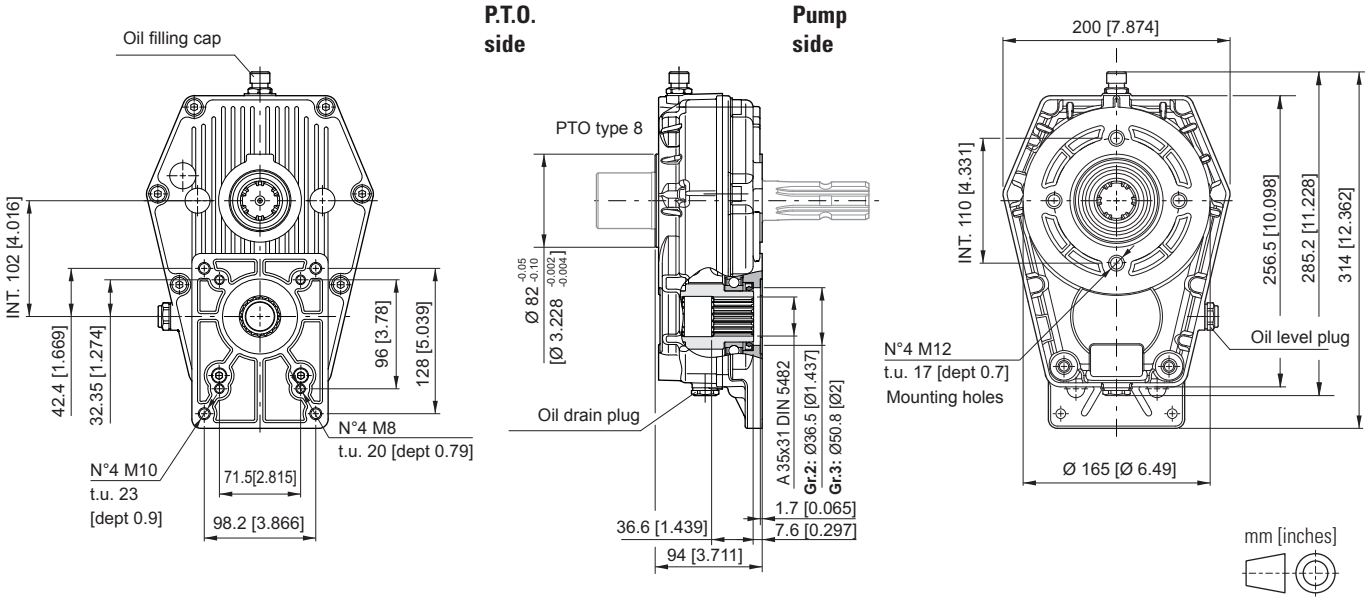

P.T.O.

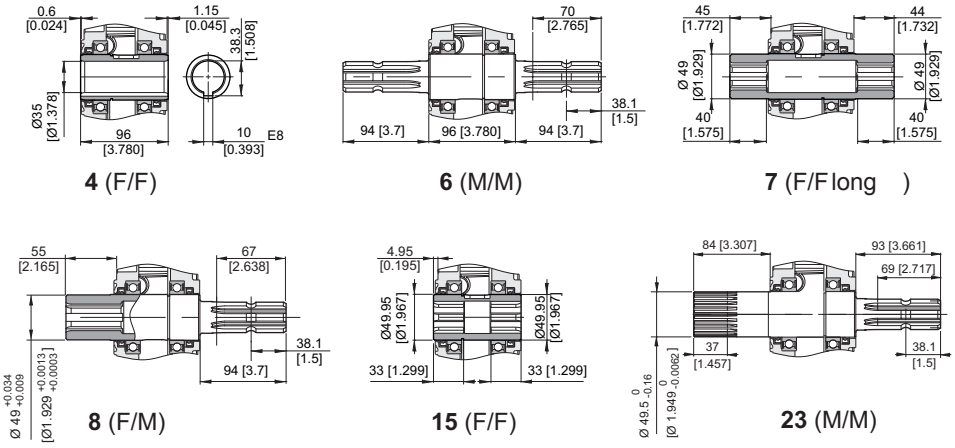

Mounting positions

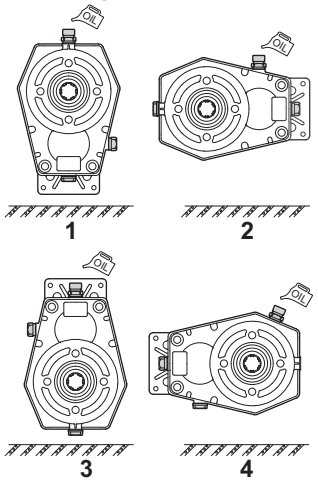

ORDERING CODE

ML52B - ** -1/ *** - *

ML52B = Speed increaser (aluminium body)

P.T.O.
- **4** = Female/Female Ø 35 short
- **6** = Male/Male 1" 3/8 DIN 9611
- **7** = Female/Female 1" 3/8 DIN 9611
- **8** = Female/Male 1" 3/8 DIN 9611
- **15** = Female/Female 1" 3/8 DIN 9611 short
- **23** = Male 50x45 Z=24 DIN 5482
  Male 1" 3/8 DIN 9611

Coupling for pump to be required to our sales department.

Mounting positions
1 / 2 / 3 / 4

Transmission ratio
- **1** = 1 : 1.0
- **1,5** = 1 : 1.5
- **2** = 1 : 2.0
- **2,6** = 1 : 2.6
- **3** = 1 : 3.0
- **3,4** = 1 : 3.4
- **3,8** = 1 : 3.8

TECHNICAL DATA

Transmission ratio	Maximum torque Nm [lbf·ft] 540 rpm C1*	540 rpm C2*	1000 rpm C1*	1000 rpm C2*	Weight kg [lb]
1 : 1.0	604 [445]	318 [235]	585 [431]	308 [227]	9,4 [20.7]
1 : 1.5	486 [358]	256 [189]	467 [344]	246 [181]	9 [19.8]
1 : 2.0	414 [305]	218 [161]	395 [291]	208 [153]	8,6 [19]
1 : 2.6	339 [250]	178 [131]	319 [235]	168 [124]	8,9 [19.6]
1 : 3.0	306 [226]	161 [119]	—	—	8,6 [19]
1 : 3.4	253 [187]	133 [98]	—	—	9 [19.8]
1 : 3.8	231 [170]	122 [89]	—	—	8,4 [18.5]

* Maximum torque on pump:
C1= maximum starting torque; C2= maximum torque for continuous duty.

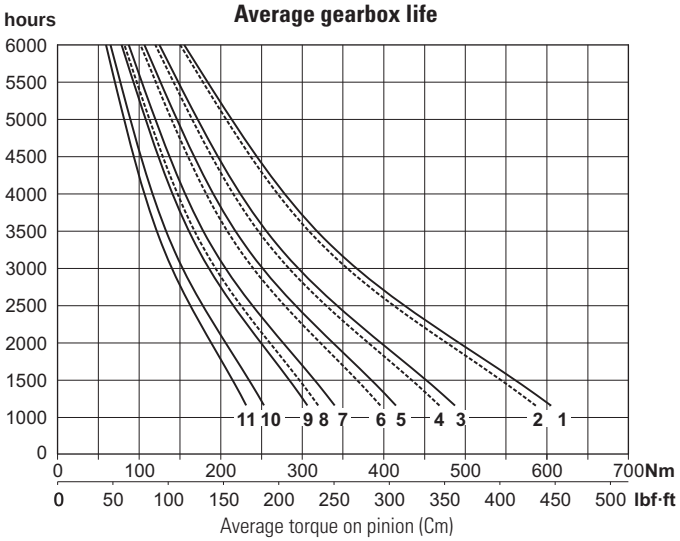

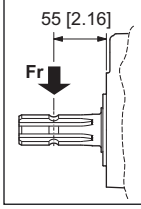

Fr: Maximum radial load on PTO

180 N
40.5 lbf

Mounting positions	Oil liters [US gallon]
1	0.34 [0.09]
2	0.80 [0.21]
3	0.52 [0.14]
4	0.75 [0.20]

Input rpm		Output (transmission ratio) 1 : 1.0	1 : 1.5	1 : 2.0	1 : 2.6	1 : 3.0	1 : 3.4	1 : 3.8
540	curve	1	3	5	7	9	10	11
	rpm	540	810	1080	1408	1620	1836	2057
1000	curve	2	4	6	8	—	—	—
	rpm	1000	1500	2000	2607	—	—	—

SPARE PARTS

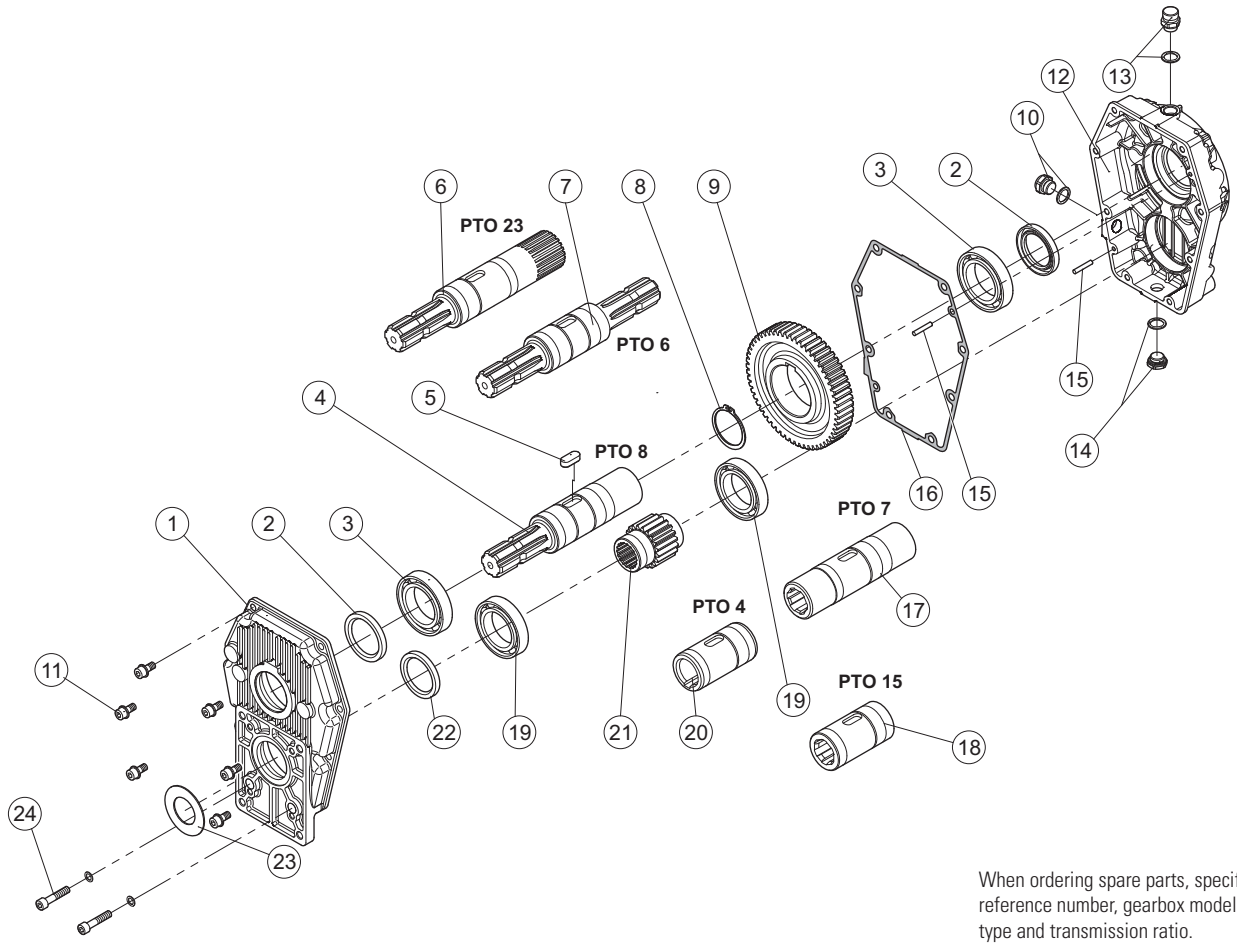

When ordering spare parts, specify reference number, gearbox model, PTO type and transmission ratio.

SPEED INCREASER GEARBOX FOR PUMPS SAE A

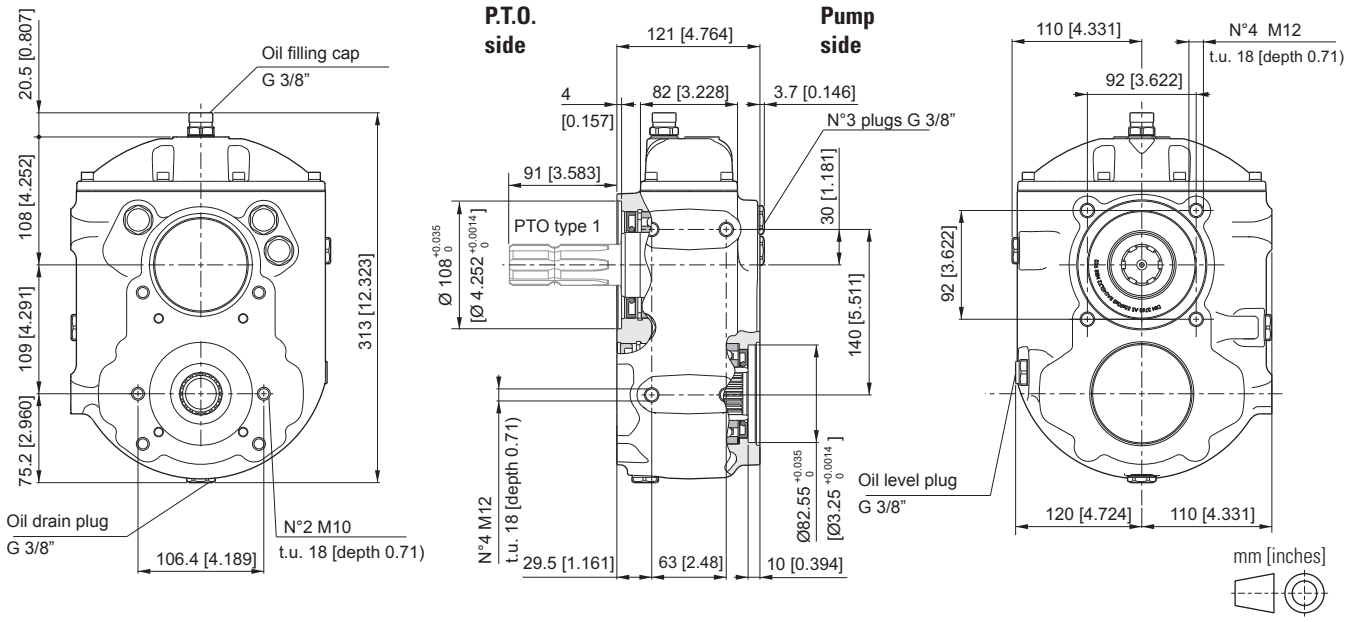

P.T.O.

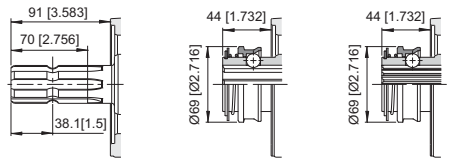

1 3 19

Posizioni di montaggio

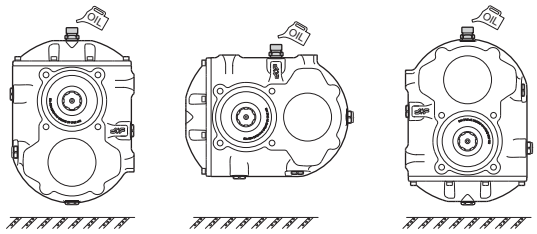

1 2 3

ORDERING CODE

B-585/A - ** -1/ *** - * - ** - ** - **

B-585/A = Speed increaser for pumps SAE A

P.T.O.
1 = Male 1" 3/8 DIN 9611
3 = Female 1" 3/8 DIN 9611 + tightening
19 = Female z21 - 16/32 DIN 9611 + tightening

Transmission ratio

1 = 1 : 1.0	**3,8** = 1 : 3.8
1,5 = 1 : 1.5	**4** = 1 : 4.0
2 = 1 : 2.0	**4,3** = 1 : 4.3
2,5 = 1 : 2.5	**4,5** = 1 : 4.5
3 = 1 : 3.0	**5** = 1 : 5.0
3,5 = 1 : 3.5	

Variants
00 = No variant

Coupling
00 = No Coupling
02 = Z=18 BF3/2
2T = Z=18 BF3/2T
03 = Z=18 BF3

Pinion internal teeth
A0 = Z13 16/32"
B0 = Z15 16/32"
C0 = Z18 DIN 5482
(from 1/1.0 to 1/3.8 transmission ratio)

Mounting positions
1 / 2 / 3

TECHNICAL DATA

Transmission ratio	Maximum torque Nm [lbf·ft] 540 rpm C1*	540 rpm C2*	1000 rpm C1*	1000 rpm C2*	Weight kg [lb]
1 : 1.0	910 [671]	492 [363]	756 [558]	408 [301]	19.5 [43]
1 : 1.5	608 [448]	403 [297]	481 [355]	319 [235]	19.5 [43]
1 : 2.0	483 [356]	297 [219]	347 [256]	213 [157]	19 [41.9]
1 : 2.5	322 [237]	240 [177]	209 [154]	156 [115]	19 [41.9]
1 : 3.0	268 [197]	207 [153]	160 [118]	123 [91]	19.5 [43]
1 : 3.5	228 [168]	137 [101]	—	—	19.5 [43]
1 : 3.8	213 [157]	136 [100]	—	—	19.5 [43]
1 : 4.0	201 [148]	134 [99]	—	—	20 [44]
1 : 4.3	192 [142]	130 [96]	—	—	20 [44]
1 : 4.5	174 [128]	115 [85]	—	—	21 [46.3]
1 : 5.0	157 [116]	89 [66]	—	—	22 [48.5]

* Maximum torque on pump:
C1= maximum starting torque; C2= maximum torque for continuous duty.

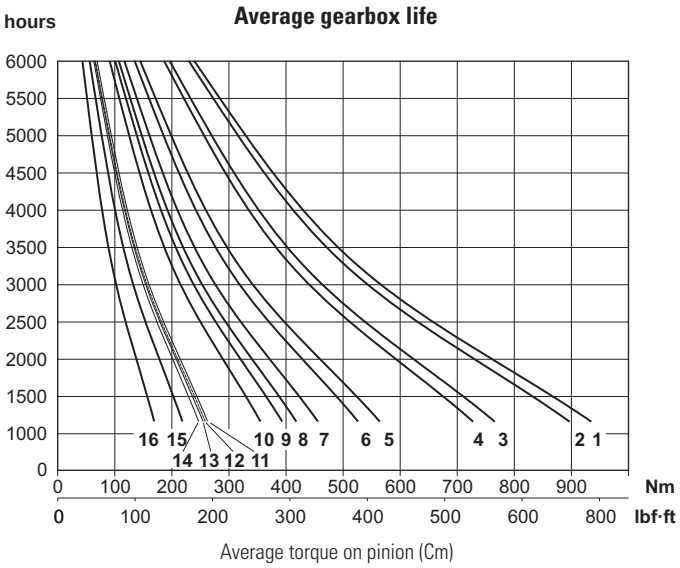

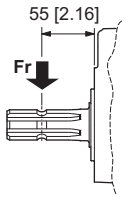

Fr: Maximum radial load on PTO

220 N
49.5 lbf

Mounting positions	Oil liters [US gallon]
1	1.4 [0.37]
2	1.6 [0.42]
3	1.4 [0.37]

Input rpm		Output (transmission ratio) 1:1.0	1:1.5	1:2.0	1:2.5	1:3.0	1:3.5	1:3.8	1:4.0	1:4.3	1:4.5	1:5.0
540	curve	1	3	5	7	9	10	12	13	14	15	16
	rpm	540	810	1080	1350	1620	1836	2052	2160	2322	2430	2700
1000	curve	2	4	6	8	10	—	—	—	—	—	—
	rpm	1000	1500	2000	2500	3000	—	—	—	—	—	—

SPARE PARTS

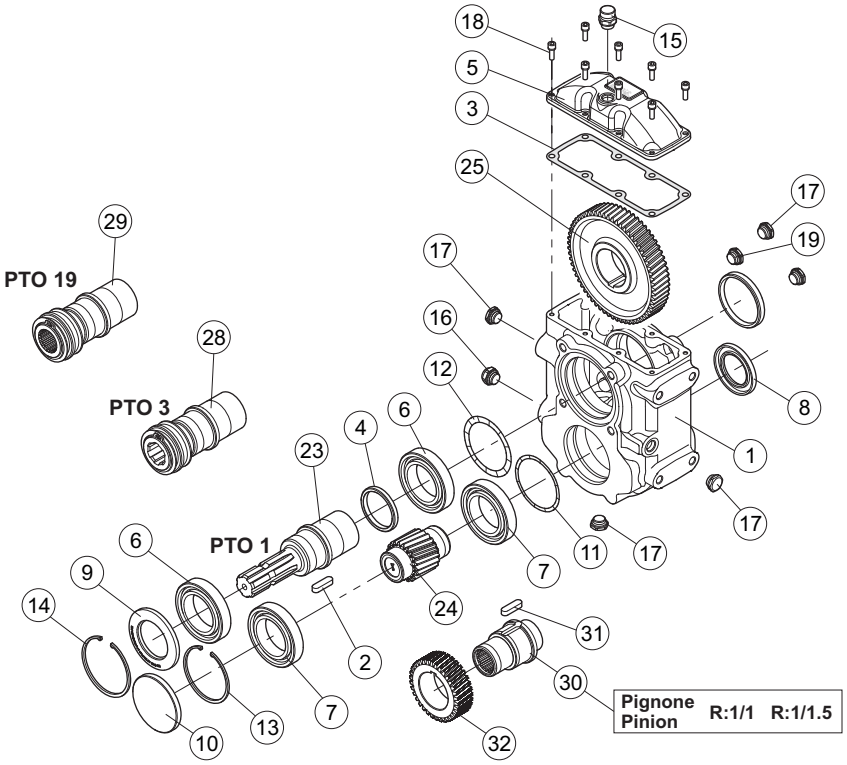

When ordering spare parts, specify reference number, gearbox model, PTO type and transmission ratio.

SPEED INCREASER GEARBOX FOR PUMPS SAE B

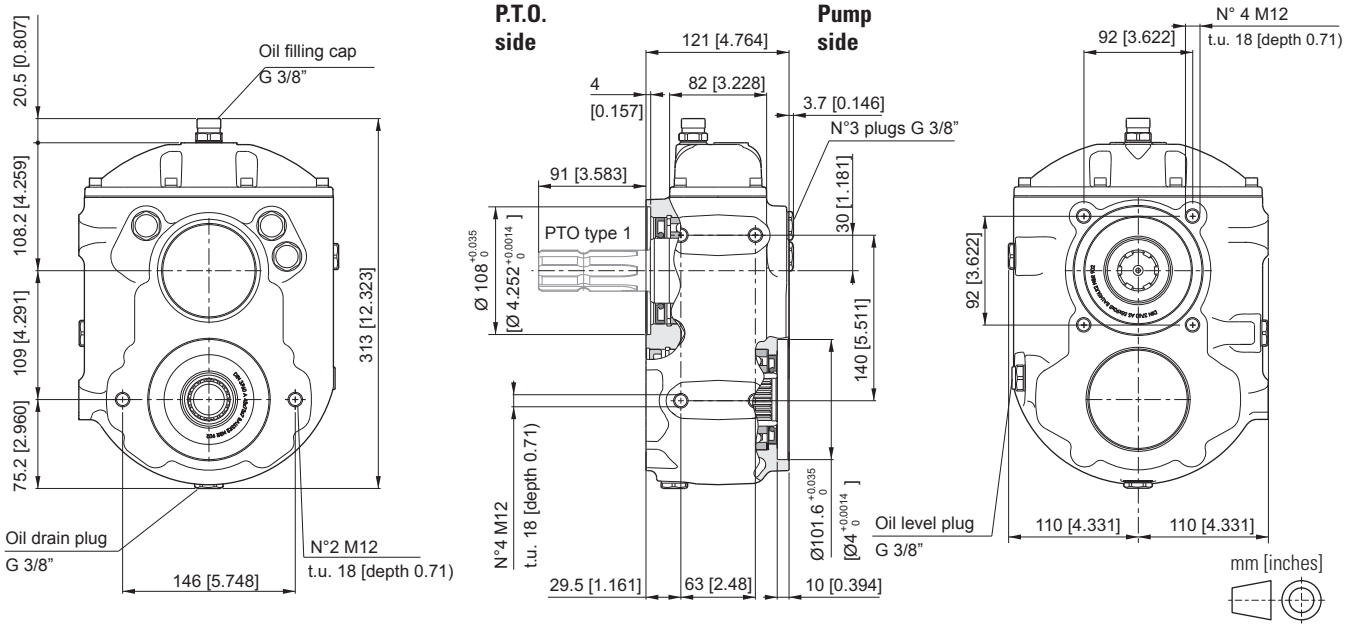

P.T.O.

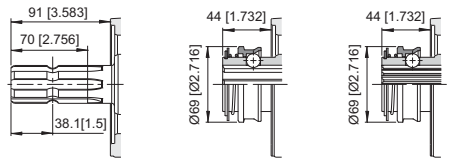

1 3 19

Posizioni di montaggio

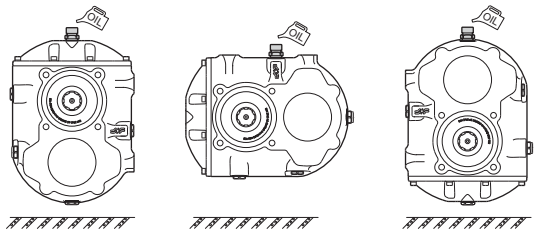

1 2 3

ORDERING CODE

B-585/B - ** -1/ *** - * - ** - ** - **

B-585/B = Speed increaser for pumps SAE B

P.T.O.
1 = Male 1" 3/8 DIN 9611
3 = Female 1" 3/8 DIN 9611 + tightening
19 = Female z21 - 16/32 DIN 9611 + tightening

Transmission ratio

1 = 1 : 1.0	**3,8** = 1 : 3.8
1,5 = 1 : 1.5	**4** = 1 : 4.0
2 = 1 : 2.0	**4,3** = 1 : 4.3
2,5 = 1 : 2.5	**4,5** = 1 : 4.5
3 = 1 : 3.0	**5** = 1 : 5.0
3,5 = 1 : 3.5	

Variants
00 = No variant

Coupling
00 = No Coupling
02 = Z=18 BF3/2
2T = Z=18 BF3/2T
03 = Z=18 BF3

Pinion internal teeth
A0 = Z13 16/32"
B0 = Z15 16/32"
C0 = Z18 DIN 5482 *(only until 1/3.8 ratio)*

Mounting positions
1 / 2 / 3

TECHNICAL DATA

Transmission ratio	Maximum torque Nm [lbf·ft] 540 rpm C1*	540 rpm C2*	1000 rpm C1*	1000 rpm C2*	Weight kg [lb]
1 : 1.0	910 [671]	492 [363]	756 [558]	408 [301]	19.5 [43]
1 : 1.5	608 [448]	403 [297]	481 [355]	319 [235]	19.5 [43]
1 : 2.0	483 [356]	297 [219]	347 [256]	213 [157]	19 [41.9]
1 : 2.5	322 [237]	240 [177]	209 [154]	156 [115]	19 [41.9]
1 : 3.0	268 [197]	207 [153]	160 [118]	123 [91]	19.5 [43]
1 : 3.5	228 [168]	137 [101]	—	—	19.5 [43]
1 : 3.8	213 [157]	136 [100]	—	—	19.5 [43]
1 : 4.0	201 [148]	134 [99]	—	—	20 [44]
1 : 4.3	192 [142]	130 [96]	—	—	20 [44]
1 : 4.5	174 [128]	115 [85]	—	—	21 [46.3]
1 : 5.0	157 [116]	89 [66]	—	—	22 [48.5]

* Maximum torque on pump:
C1= maximum starting torque; C2= maximum torque for continuous duty.

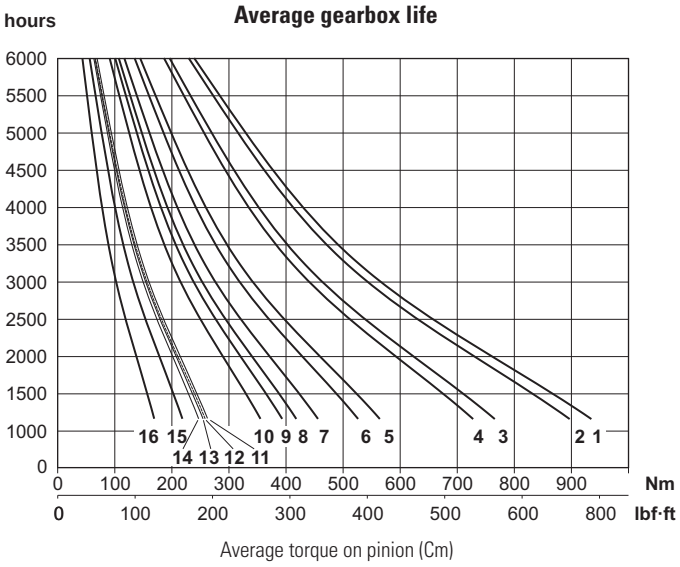

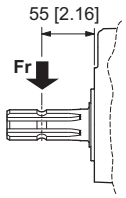

Fr: Maximum radial load on PTO

220 N
49.5 lbf

Mounting positions	Oil liters [US gallon]
1	1.4 [0.37]
2	1.6 [0.42]
3	1.4 [0.37]

Input rpm		Output (transmission ratio) 1:1.0	1:1.5	1:2.0	1:2.5	1:3.0	1:3.5	1:3.8	1:4.0	1:4.3	1:4.5	1:5.0
540	curve	1	3	5	7	9	10	12	13	14	15	16
	rpm	540	810	1080	1350	1620	1836	2052	2160	2322	2430	2700
1000	curve	2	4	6	8	10	—	—	—	—	—	—
	rpm	1000	1500	2000	2500	3000	—	—	—	—	—	—

SPARE PARTS

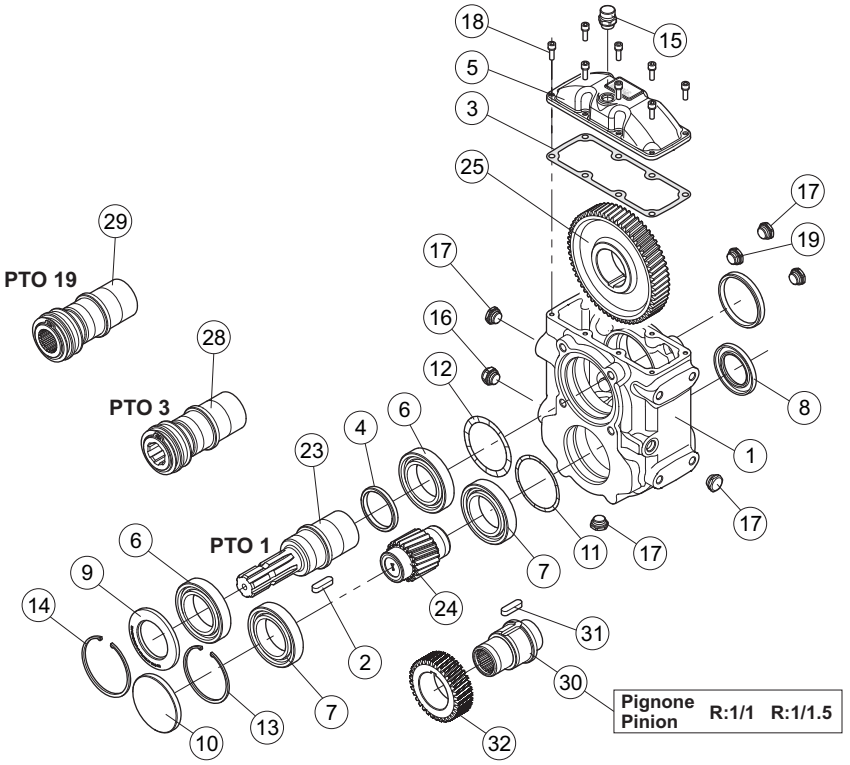

When ordering spare parts, specify reference number, gearbox model, PTO type and transmission ratio.

SPEED INCREASER GEARBOX FOR PUMPS GR.2/3

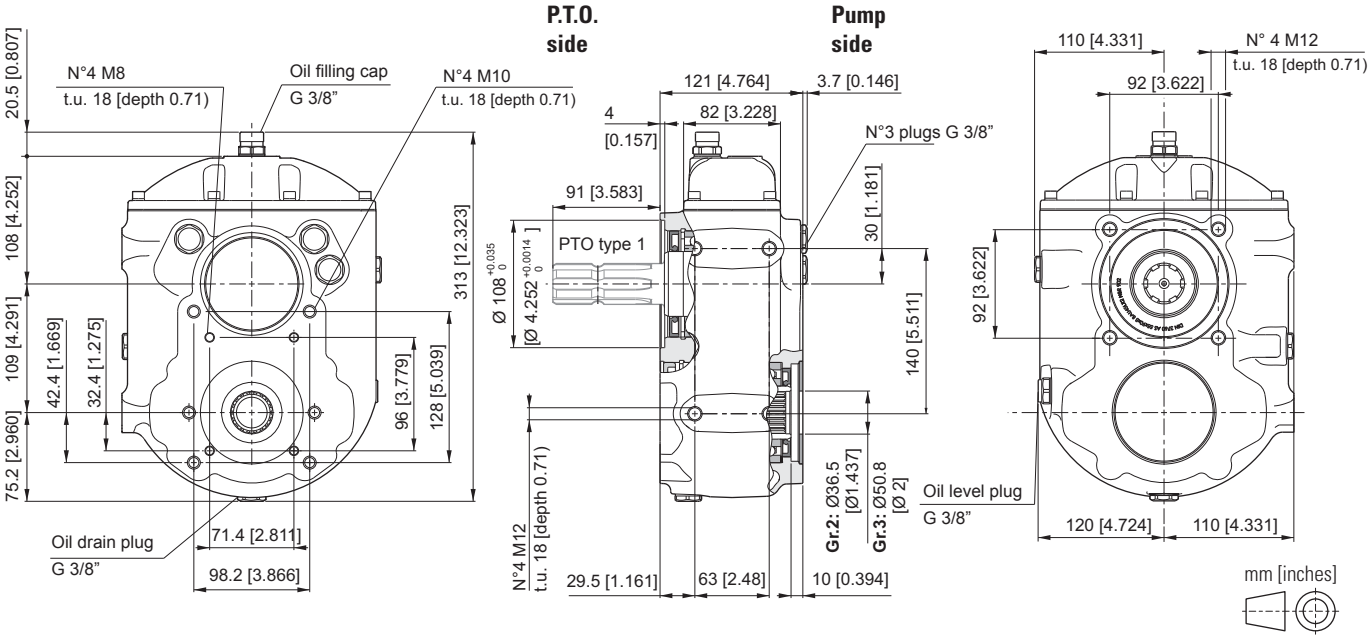

P.T.O.

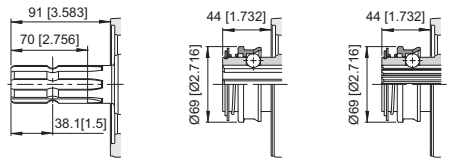

1 3 19

Posizioni di montaggio

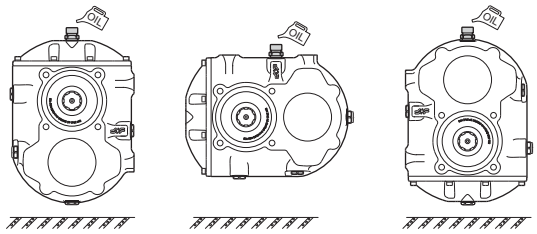

1 2 3

ORDERING CODE

B-585/P - ** -1/ *** - * - ** - ** - **

B-585/P = Speed increaser for pumps Gr.2/3

P.T.O.
1 = Male 1" 3/8 DIN 9611
3 = Female 1" 3/8 DIN 9611 + tightening
19 = Female z21 - 16/32 DIN 9611 + tightening

Transmission ratio

1 = 1 : 1.0	**3,8** = 1 : 3.8
1,5 = 1 : 1.5	**4** = 1 : 4.0
2 = 1 : 2.0	**4,3** = 1 : 4.3
2,5 = 1 : 2.5	**4,5** = 1 : 4.5
3 = 1 : 3.0	**5** = 1 : 5.0
3,5 = 1 : 3.5	

Variants
00 = No variant

Coupling
00 = No Coupling
02 = Z=18 BF3/2
2T = Z=18 BF3/2T
03 = Z=18 BF3

Pinion internal teeth
A0 = Z13 16/32"
B0 = Z15 16/32"
C0 = Z18 DIN 5482 *(only until 1/3.8 ratio)*

Mounting positions
1 / 2 / 3

TECHNICAL DATA

Transmission ratio	Maximum torque Nm [lbf·ft] 540 rpm C1*	540 rpm C2*	1000 rpm C1*	1000 rpm C2*	Weight kg [lb]
1 : 1.0	910 [671]	492 [363]	756 [558]	408 [301]	19.5 [43]
1 : 1.5	608 [448]	403 [297]	481 [355]	319 [235]	19.5 [43]
1 : 2.0	483 [356]	297 [219]	347 [256]	213 [157]	19 [41.9]
1 : 2.5	322 [237]	240 [177]	209 [154]	156 [115]	19 [41.9]
1 : 3.0	268 [197]	207 [153]	160 [118]	123 [91]	19.5 [43]
1 : 3.5	228 [168]	137 [101]	—	—	19.5 [43]
1 : 3.8	213 [157]	136 [100]	—	—	19.5 [43]
1 : 4.0	201 [148]	134 [99]	—	—	20 [44]
1 : 4.3	192 [142]	130 [96]	—	—	20 [44]
1 : 4.5	174 [128]	115 [85]	—	—	21 [46.3]
1 : 5.0	157 [116]	89 [66]	—	—	22 [48.5]

* Maximum torque on pump:
C1= maximum starting torque; C2= maximum torque for continuous duty.

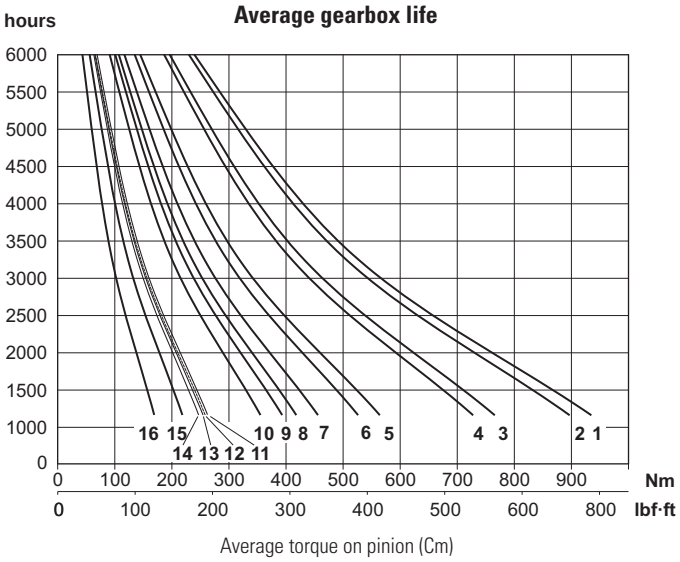

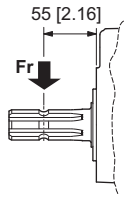

Fr: Maximum radial load on PTO

220 N
49.5 lbf

Mounting positions	Oil liters [US gallon]
1	1.4 [0.37]
2	1.6 [0.42]
3	1.4 [0.37]

Input rpm		Output (transmission ratio) 1:1.0	1:1.5	1:2.0	1:2.5	1:3.0	1:3.5	1:3.8	1:4.0	1:4.3	1:4.5	1:5.0
540	curve	1	3	5	7	9	10	12	13	14	15	16
	rpm	540	810	1080	1350	1620	1836	2052	2160	2322	2430	2700
1000	curve	2	4	6	8	10	—	—	—	—	—	—
	rpm	1000	1500	2000	2500	3000	—	—	—	—	—	—

SPARE PARTS

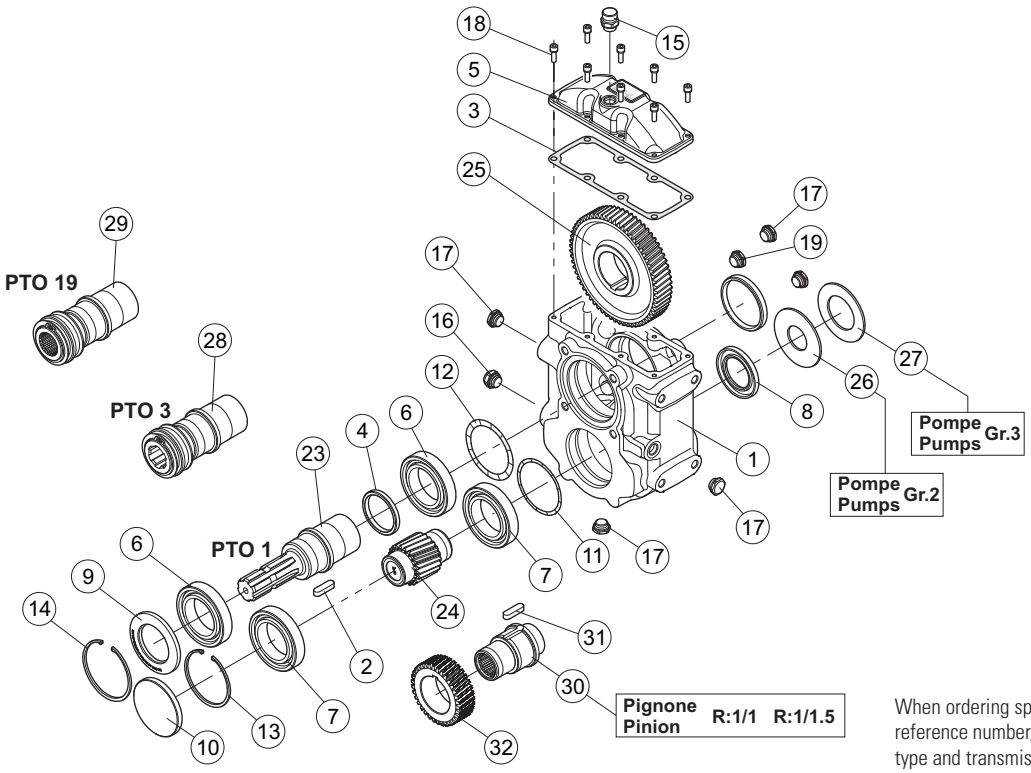

When ordering spare parts, specify reference number, gearbox model, PTO type and transmission ratio.

SPEED INCREASER GEARBOX FOR UNIVERSAL FLANGES

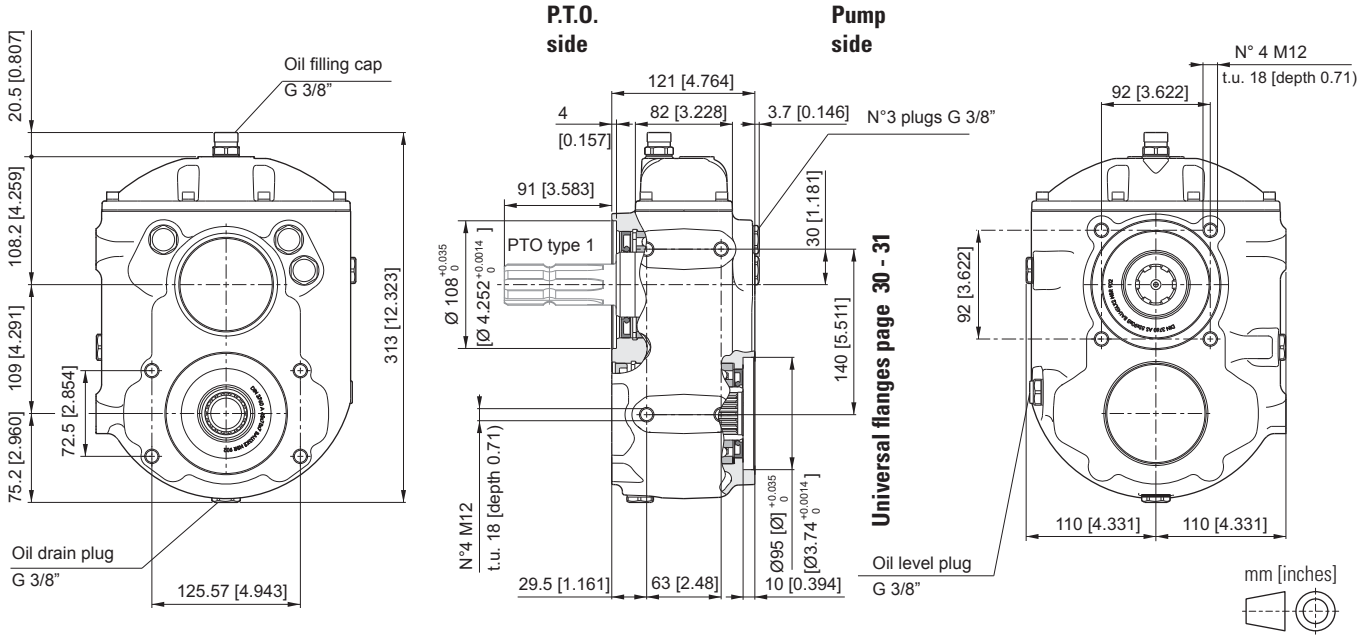

P.T.O.

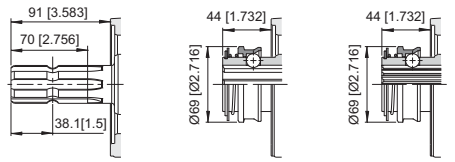

1 3 19

Posizioni di montaggio

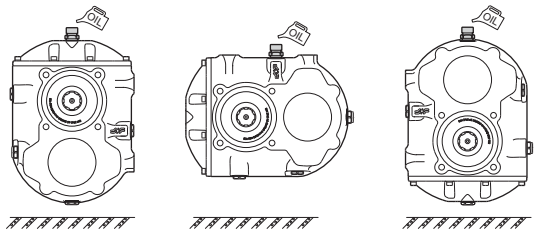

1 2 3

ORDERING CODE

Flange

B-585/U - ** -1/ *** - * - ** - ** - * * - **

B-585/U = Speed increaser for universal flanges

P.T.O.
1 = Male 1" 3/8 DIN 9611
3 = Female 1" 3/8 DIN 9611 + tightening
19 = Female z21 - 16/32 DIN 9611 + tightening

Transmission ratio

1 = 1 : 1.0	**3** = 1 : 3.0
1,5 = 1 : 1.5	**3,5** = 1 : 3.5
2 = 1 : 2.0	**3,8** = 1 : 3.8
2,5 = 1 : 2.5	

Mounting positions
1 / 2 / 3

Pinion internal teeth
A0 = Z13 16/32"
B0 = Z15 16/32"
C0 = Z18 DIN 5482 *(only until 1/3.8 ratio)*

Variants
00 = No variant

Type
(see page 30 - 31)

Type	Flange position 1	Flange position 2
D / G		
E / F		
A / B / C / L / M	—	

Coupling
00 = No Coupling
02 = Z=18 BF3/2
2T = Z=18 BF3/2T
03 = Z=18 BF3

TECHNICAL DATA

Transmission ratio	Maximum torque Nm [lbf·ft] 540 rpm C1*	540 rpm C2*	1000 rpm C1*	1000 rpm C2*	Weight kg [lb]
1 : 1.0	910 [671]	492 [363]	756 [558]	408 [301]	19.5 [43]
1 : 1.5	608 [448]	403 [297]	481 [355]	319 [235]	19.5 [43]
1 : 2.0	483 [356]	297 [219]	347 [256]	213 [157]	19 [41.9]
1 : 2.5	322 [237]	240 [177]	209 [154]	156 [115]	19 [41.9]
1 : 3.0	268 [197]	207 [153]	160 [118]	123 [91]	19.5 [43]
1 : 3.5	228 [168]	137 [101]	—	—	19.5 [43]
1 : 3.8	213 [157]	136 [100]	—	—	19.5 [43]

* Maximum torque on pump:
C1= maximum starting torque; C2= maximum torque for continuous duty.

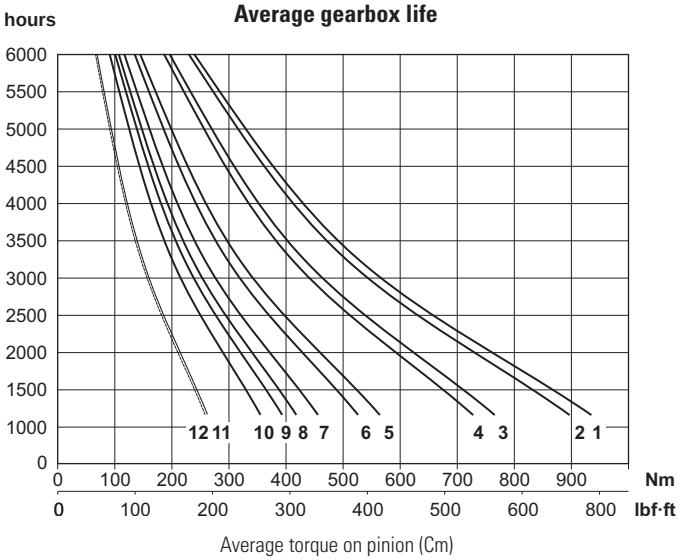

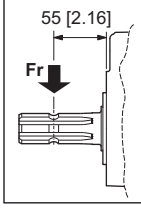

Fr: Maximum radial load on PTO

220 N
49.5 lbf

Mounting positions	Oil liters [US gallon]
1	1.4 [0.37]
2	1.6 [0.42]
3	1.4 [0.37]

Input rpm		Output (transmission ratio) 1: 1.0	1:1.5	1:2.0	1:2.5	1:3.0	1:3.5	1:3.8
540	curve	1	3	5	7	9	10	12
	rpm	540	810	1080	1350	1620	1836	2052
1000	curve	2	4	6	8	10	—	—
	rpm	1000	1500	2000	2500	3000	—	—

SPARE PARTS

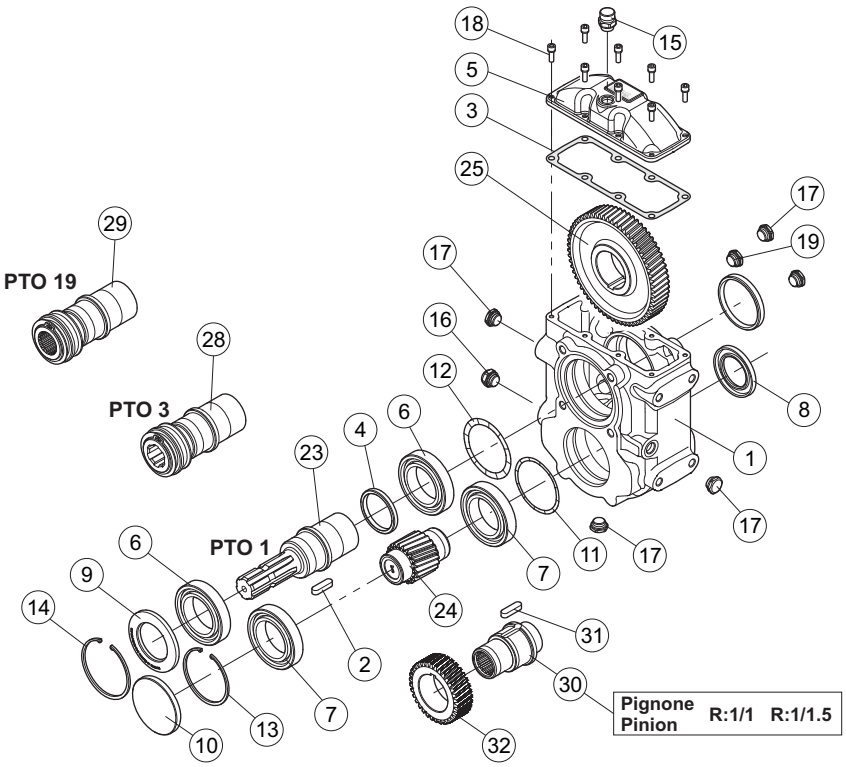

When ordering spare parts, specify reference number, gearbox model, PTO type and transmission ratio.

SPEED INCREASER GEARBOX FOR PUMPS WITH EUROPEAN UNIFIED FLANGE / SAE / ISO

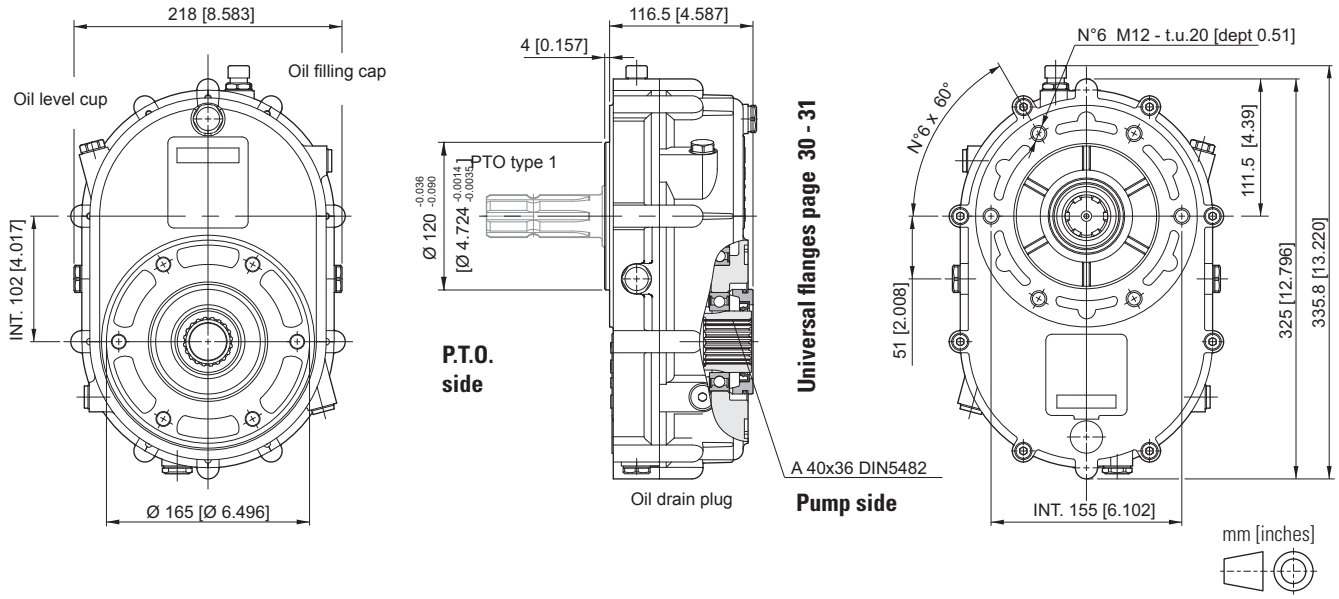

P.T.O.

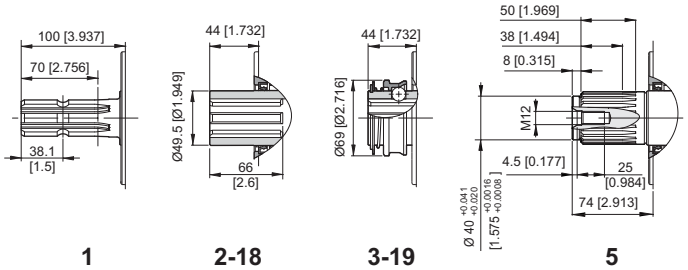

Mounting positions

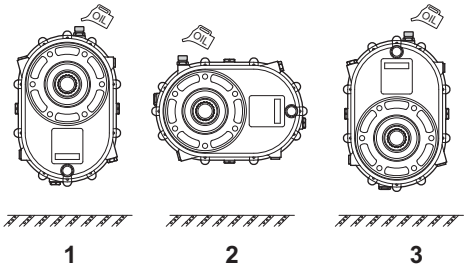

ORDERING CODE

Flange

B580 - ** -1/ *** - * - * *

B580 = Speed increaser (aluminium body)

P.T.O.
1 = Male 1" 3/8 DIN 9611
2 = Female 1" 3/8 DIN 9611
3 = Female 1" 3/8 DIN 9611 + tightening
5 = Male Z23 DIN 5482
18 = Female z21 - 16/32 DIN 9611
19 = Female z21 - 16/32 DIN 9611 + tightening

Coupling for pump to be required to our sales department.

Type (see page 30 - 31)

	Flange position 1	Flange position 2
D / G		
E / F		
A / B / C / L / M	—	

Mounting positions
1 / 2 / 3

Transmission ratio
1 = 1 : 1.0
1,5 = 1 : 1.5
2 = 1 : 2.0
2,6 = 1 : 2.6
3 = 1 : 3.0
3,4 = 1 : 3.4
4 = 1 : 4.0
4,8 = 1 : 4.8

TECHNICAL DATA

Transmission ratio	Maximum torque Nm [lbf·ft] 540 rpm C1*	540 rpm C2*	1000 rpm C1*	1000 rpm C2*	Weight kg [lb]
1 : 1.0	885 [655]	466 [344]	866 [639]	456 [336]	12 [26.5]
1 : 1.5	608 [448]	320 [236]	589 [434]	310 [229]	12 [26.5]
1 : 2.0	460 [339]	242 [178]	441 [325]	232 [171]	11 [24.3]
1 : 2.6	342 [252]	180 [133]	323 [238]	170 [125]	10,8 [23.8]
1 : 3.0	310 [228]	163 [120]	—	—	10,5 [23.1]
1 : 3.4	257 [190]	135 [100]	—	—	11,5 [25.4]
1 : 4.0	224 [165]	118 [87]	—	—	11,5 [25.4]
1 : 4.8	186 [137]	98 [72]	—	—	13,6 [30]

* Maximum torque on pump:
C1= maximum starting torque; C2= maximum torque for continuous duty.

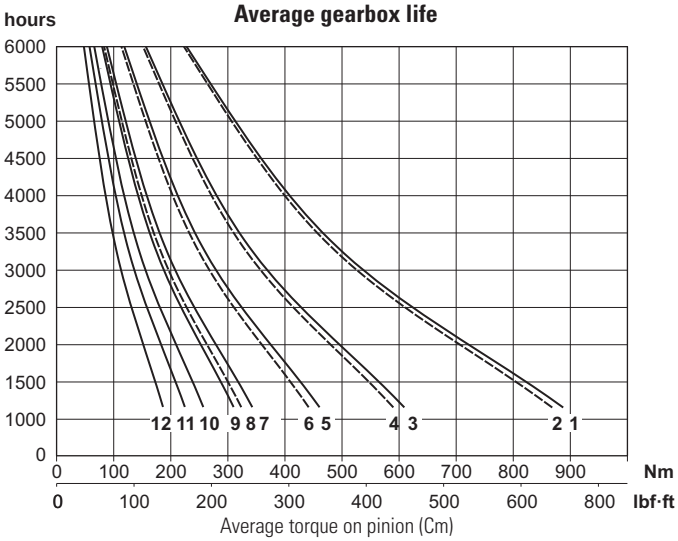

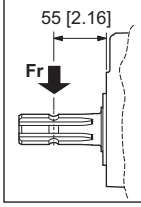

Fr: Maximum radial load on PTO

210 N
47.2 lbf

Mounting positions	Oil liters [US gallon]
1	0.95 [0.25]
2	1.15 [0.30]
3	1.25 [0.33]

Input rpm		Output (transmission ratio) 1 : 1.0	1 : 1.5	1 : 2.0	1 : 2.6	1 : 3.0	1 : 3,4	1 : 4.0	1 : 4.8
540	curve	1	3	5	7	9	10	11	12
	rpm	540	810	1080	1408	1620	1836	2160	2592
1000	curve	2	4	6	8				
	rpm	1000	1500	2000	2607				

SPARE PARTS

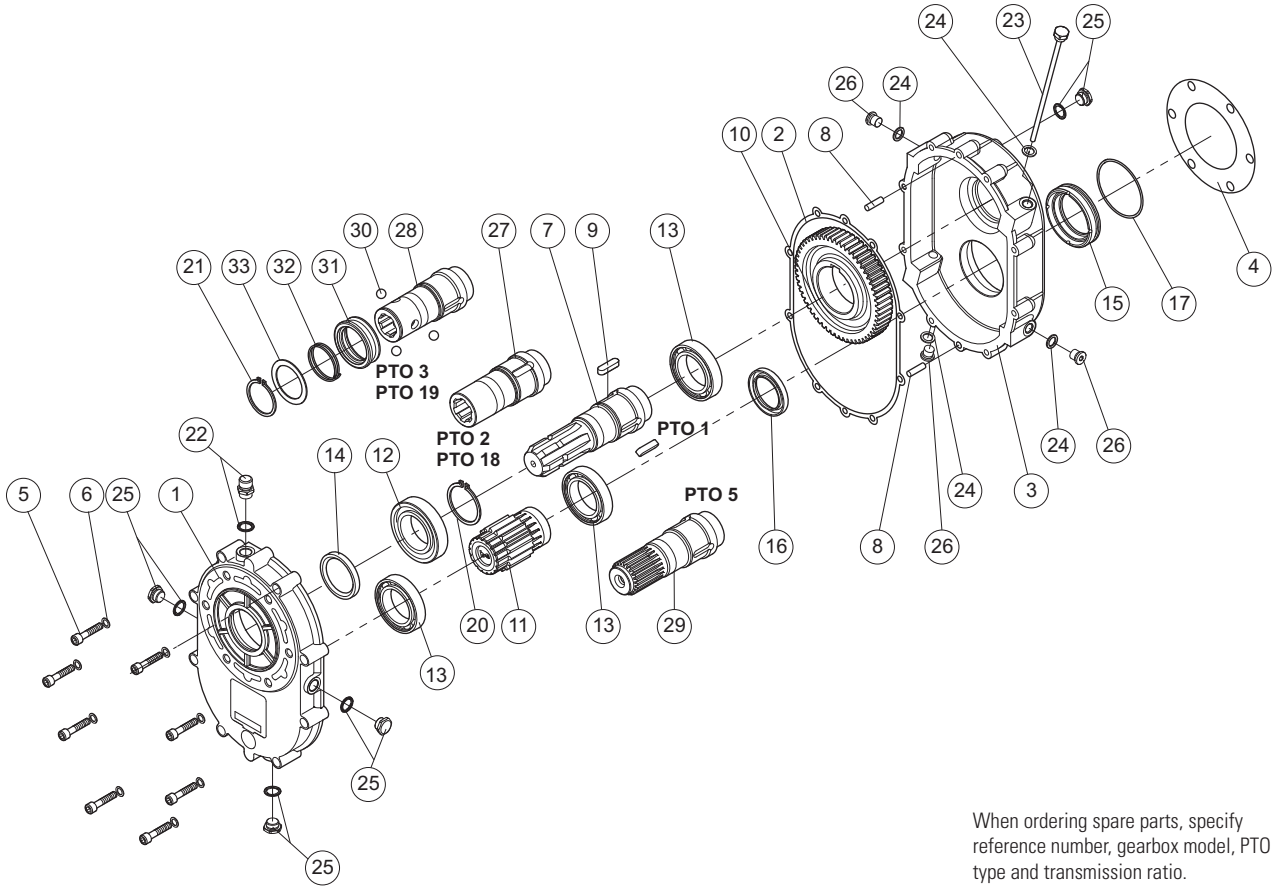

When ordering spare parts, specify reference number, gearbox model, PTO type and transmission ratio.

SPEED INCREASER GEARBOX FOR PUMPS WITH EUROPEAN UNIFIED FLANGE / SAE / ISO

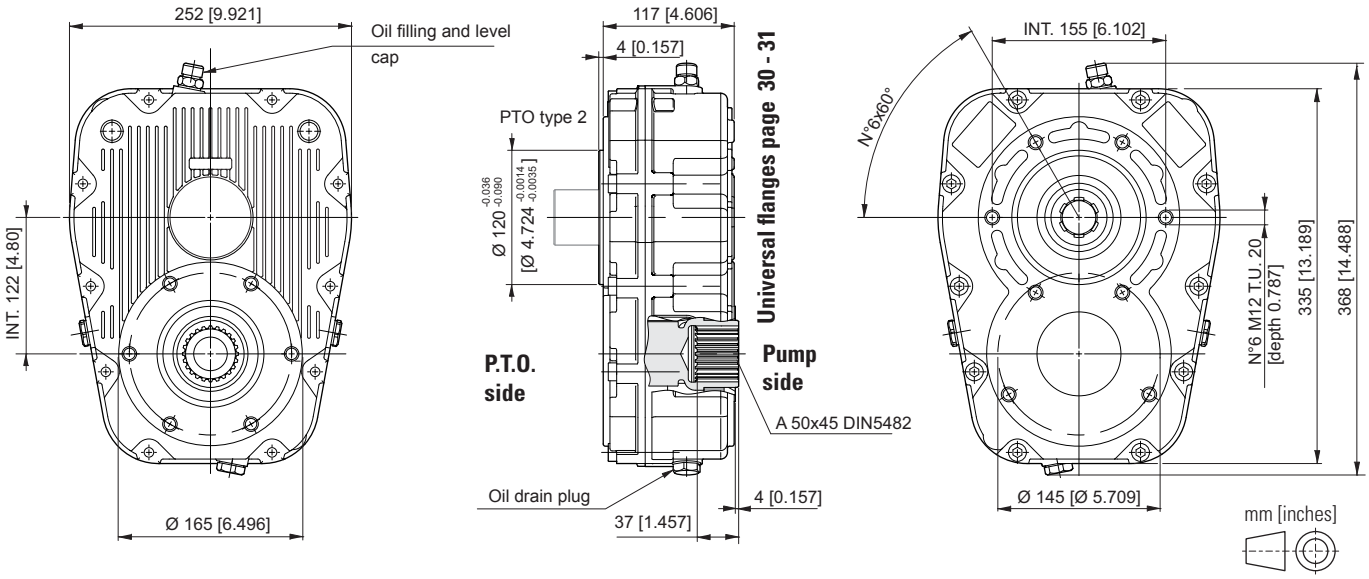

P.T.O.

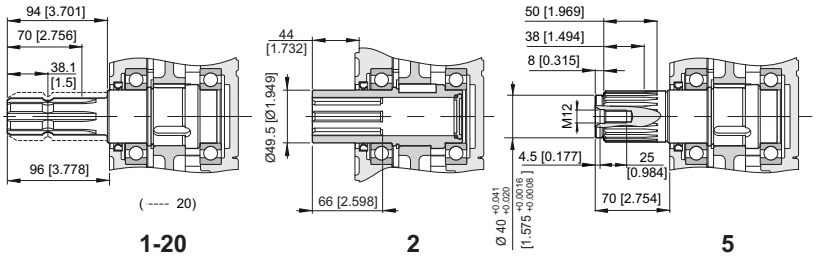

Mounting positions

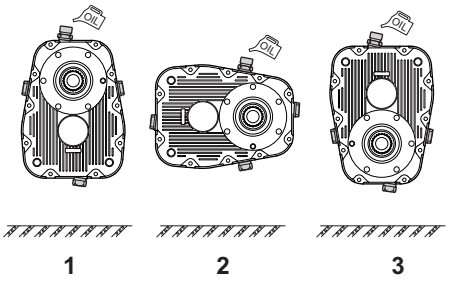

ORDERING CODE

B600 - ** -1/ *** - * - * *

Flange

B600 = Speed increaser (aluminium body)

P.T.O.
1 = Male 1" 3/8 DIN 9611
2 = Female 1" 3/8 DIN 9611
5 = Male Z23 DIN 5482
20 = Male 1" 3/4

Coupling for pump to be required to our sales department.

Type (see page 30 - 31)	Flange position 1	Flange position 2
D / G		
E / F		
A / B / C / L / M	—	

Mounting positions
1 / 2 / 3

Transmission ratio
1 = 1 : 1.0
1,5 = 1 : 1.5
2 = 1 : 2.0
2,6 = 1 : 2.6
3 = 1 : 3.0
3,4 = 1 : 3.4
3,8 = 1 : 3.8

TECHNICAL DATA

Transmission ratio	Maximum torque Nm [lbf·ft] 540 rpm C1*	540 rpm C2*	1000 rpm C1*	1000 rpm C2*	Weight kg [lb]
1 : 1.0	1292 [953]	680 [502]	1193 [880]	628 [463]	17,5 [38,6]
1 : 1.5	1025 [756]	539 [398]	876 [646]	461 [340]	16,2 [35,7]
1 : 2.0	783 [578]	412 [304]	671 [495]	353 [260]	16,1 [35,5]
1 : 2.6	642 [474]	338 [249]	513 [378]	270 [199]	16,1 [35,5]
1 : 3.0	567 [418]	298 [220]	—	—	16,3 [35,9]
1 : 3.4	481 [354]	253 [187]	—	—	16,3 [35,9]
1 : 3.8	399 [294]	210 [155]	—	—	16,3 [35,9]

* Maximum torque on pump:
C1= maximum starting torque; C2= maximum torque for continuous duty.

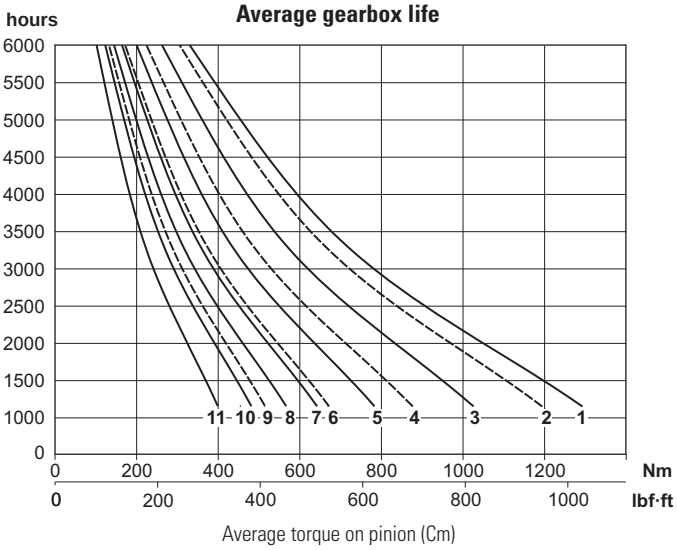

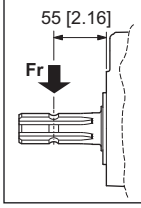

Fr: Maximum radial load on PTO

230 N
51.7 lbf

Mounting positions	Oil liters [US gallon]
1	1.4 [0.37]
2	1.65 [0.44]
3	1.00 [0.26]

Input rpm		Output (transmission ratio) 1 : 1.0	1 : 1.5	1 : 2.0	1 : 2.6	1 : 3.0	1 : 3.4	1 : 3.8
540	curve	1	3	5	7	8	10	11
	rpm	540	810	1080	1408	1620	1836	2030
1000	curve	2	4	6	9	—	—	—
	rpm	1000	1500	2000	2607	—	—	—

SPARE PARTS

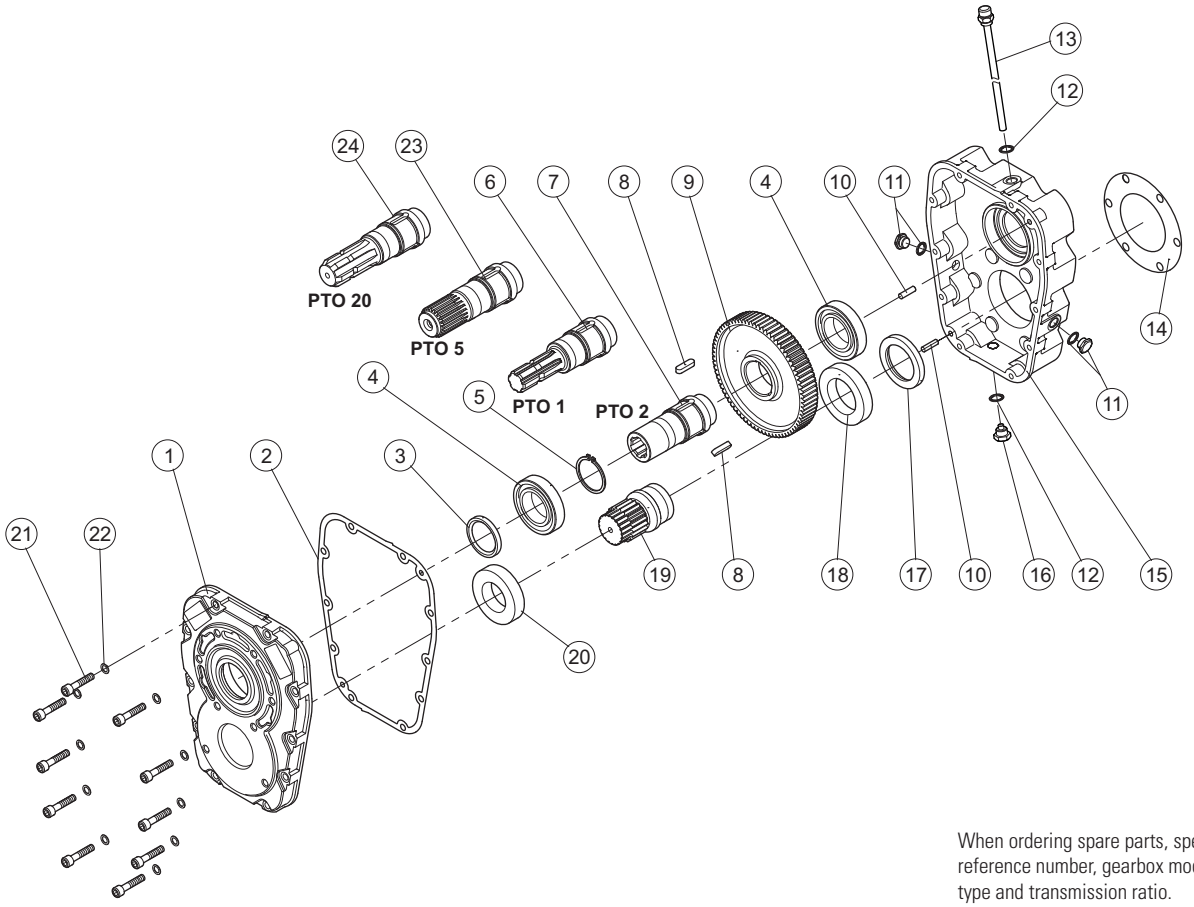

When ordering spare parts, specify reference number, gearbox model, PTO type and transmission ratio.

SPLITTER FOR PUMPS WITH EUROPEAN UNIFIED FLANGE GR 2/3 - SAE A/B

Pump side

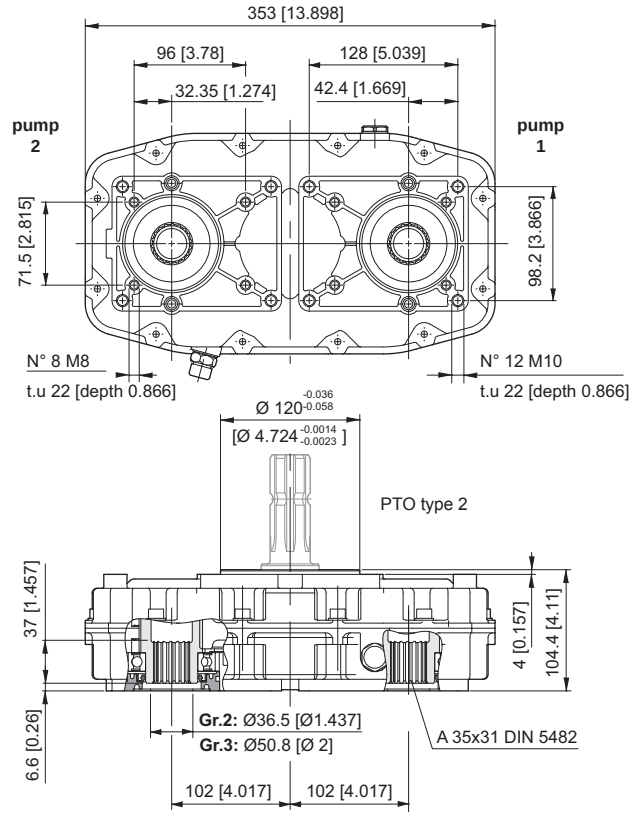

P.T.O. side

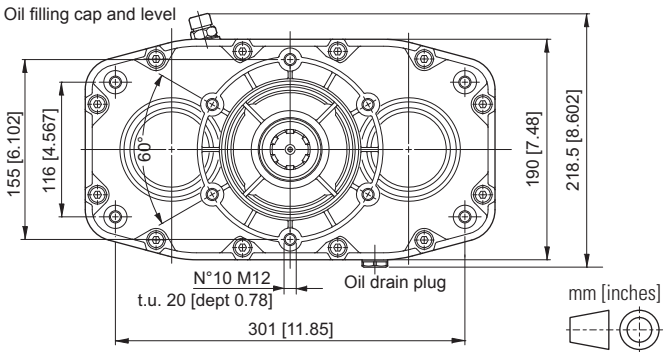

P.T.O.

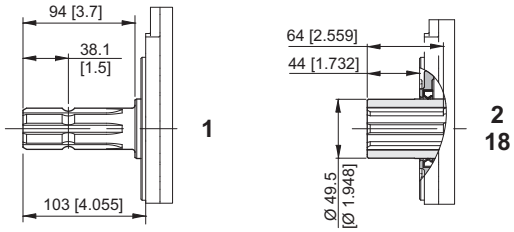

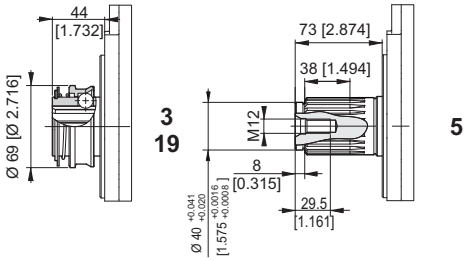

Mounting positions

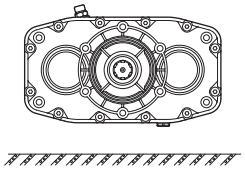

ORDERING CODE

B502 - ** -1/ *** - * / *

pump 1 / pump 2

B502 = Splitter gearbox (aluminium body)

P.T.O.
1 = Male 1" 3/8 DIN 9611
2 = Female 1" 3/8 DIN 9611
3 = Female 1" 3/8 DIN 9611 + tightening
5 = Male Z23 DIN 5482
18 = Female z21 - 16/32 DIN 9611
19 = Female z21 - 16/32 DIN 9611 + tightening

Coupling for pump to be required to our sales department.

Flange
A = SAE A
B = SAE B (with flange "T" page 30
C = GR 2/3

Transmission ratio
1 = 1 : 1.0
1,5 = 1 : 1.5
2 = 1 : 2.0
2,6 = 1 : 2.6
3 = 1 : 3.0
3,4 = 1 : 3.4
3,8 = 1 : 3.8

TECHNICAL DATA

Transmission ratio	Maximum torque Nm [lbf·ft] 540 rpm C1*	540 rpm C2*	1000 rpm C1*	1000 rpm C2*	Weight kg [lb]
1 : 1.0	604 [445]	318 [235]	585 [431]	308 [227]	12,9 [28.4]
1 : 1.5	486 [358]	256 [189]	467 [344]	246 [181]	12,2 [26.9]
1 : 2.0	414 [305]	218 [161]	395 [291]	208 [153]	11,2 [24,.7]
1 : 2.6	339 [250]	178 [131]	319 [235]	168 [124]	11,8 [26]
1 : 3.0	306 [226]	161 [119]	—	—	11,2 [24.7]
1 : 3.4	253 [187]	133 [98]	—	—	11,2 [24.7]
1 : 3.8	231 [170]	122 [89]	—	—	11,1 [24.5]

* Maximum torque on pump:
C1= maximum starting torque; C2= maximum torque for continuous duty.

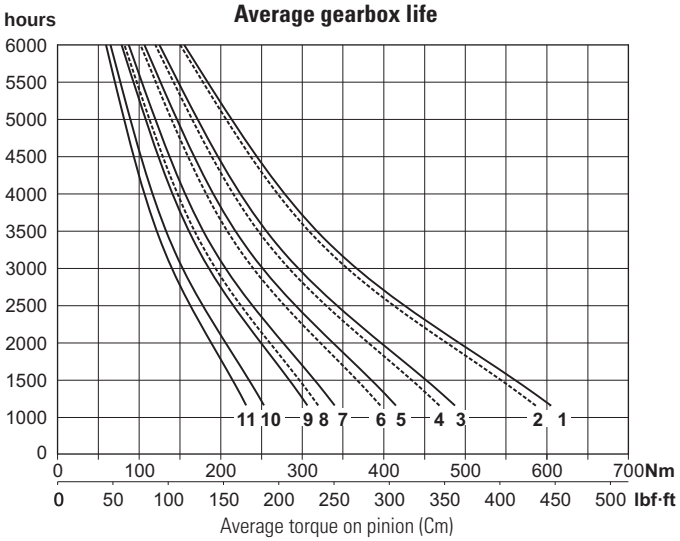

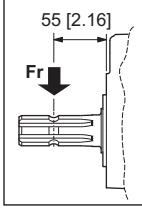

Fr: Maximum radial load on PTO

180 N
40.5 lbf

Oil liters [US gallon]
1.20 [0.32]

Input rpm		Output (transmission ratio) 1 : 1.0	1 : 1.5	1 : 2.0	1 : 2.6	1 : 3.0	1 : 3.4	1 : 3.8
540	curve	1	3	5	7	9	10	11
	rpm	540	810	1080	1408	1620	1836	2160
1000	curve	2	4	6	8	—	—	—
	rpm	1000	1500	2000	2607	—	—	—

SPARE PARTS

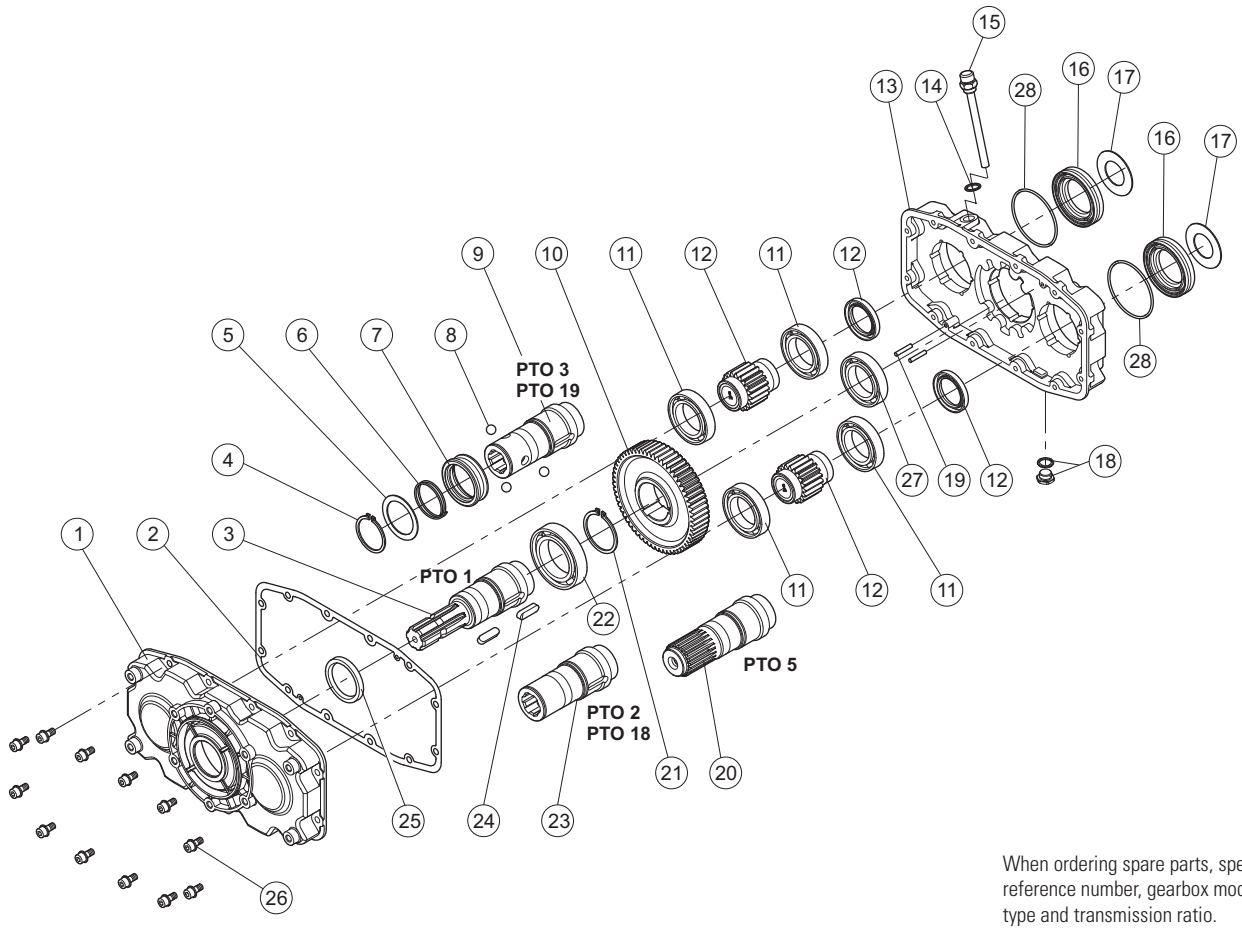

When ordering spare parts, specify reference number, gearbox model, PTO type and transmission ratio.

SPLITTER GEARBOX FOR PUMPS WITH EUROPEAN UNIFIED FLANGE / SAE / ISO

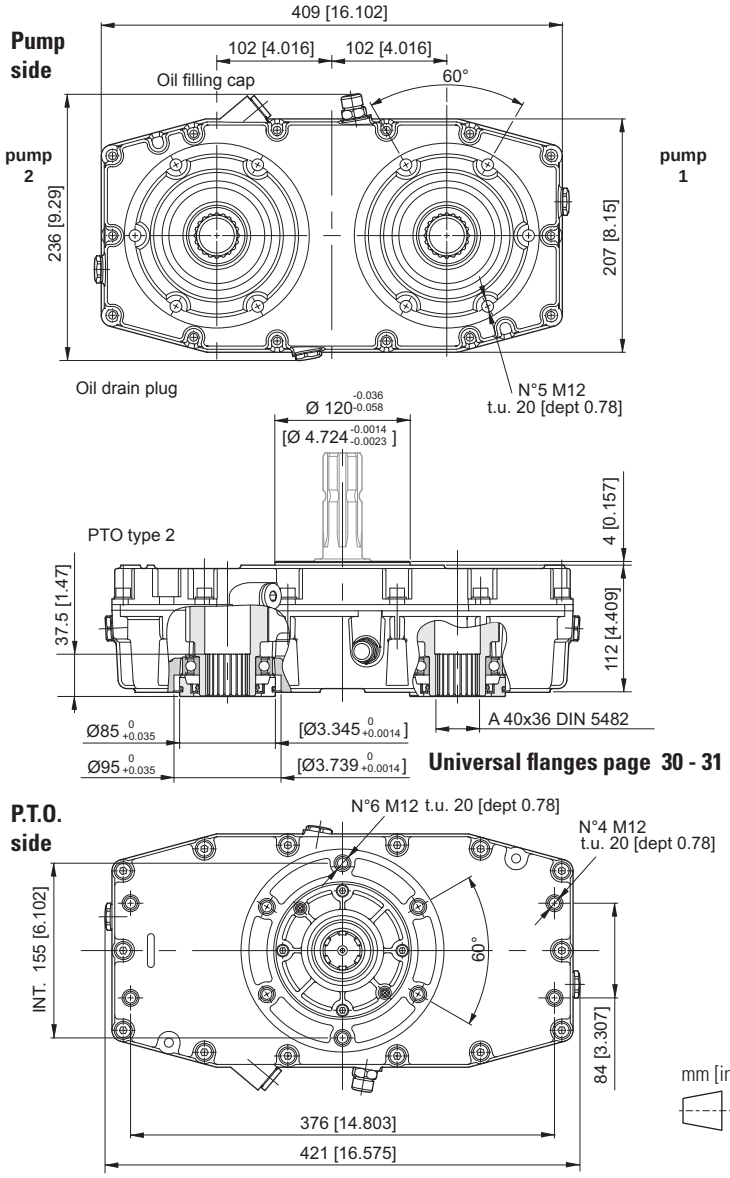

Universal flanges page 30 - 31

mm [inches]

P.T.O.

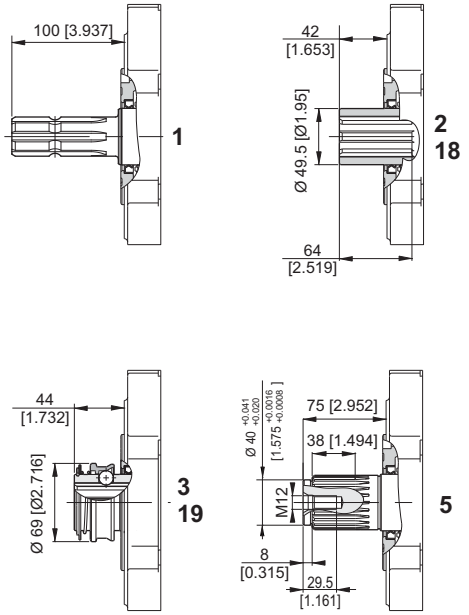

Mounting positions

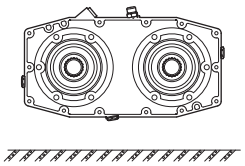

ORDERING CODE

B582 - ** -1/ *** - * * / * *

flange pump 1 — flange pump 2

B502 = Splitter gearbox (aluminium body)

P.T.O.
1 = Male 1" 3/8 DIN 9611
2 = Female 1" 3/8 DIN 9611
3 = Female 1" 3/8 DIN 9611 + tightening
5 = Male Z23 DIN 5482
18 = Female z21 - 16/32 DIN 9611
19 = Female z21 - 16/32 DIN 9611 + tightening

Coupling for pump to be required to our sales department.

Type (see page 30 - 31)	Flange position 1	Flange position 2
D / G *(1)*		
E / F		
A / B / C / L / M	—	

(1) **G1** only on pump 2 - **G2** only on pump 1

Transmission ratio

1 = 1 : 1.0	**3** = 1 : 3.0
1,5 = 1 : 1.5	**3,4** = 1 : 3.4
2 = 1 : 2.0	**4** = 1 : 4.0
2,6 = 1 : 2.6	**4,8** = 1 : 4.8

TECHNICAL DATA

Transmission ratio	Maximum torque Nm [lbf·ft] 540 rpm C1*	540 rpm C2*	1000 rpm C1*	1000 rpm C2*	Weight kg [lb]
1 : 1.0	885 [655]	466 [344]	866 [639]	456 [336]	16 [35.3]
1 : 1.5	608 [448]	320 [236]	589 [434]	310 [229]	15,5 [34.2]
1 : 2.0	460 [339]	242 [178]	441 [325]	232 [171]	14,6 [32.2]
1 : 2.6	342 [252]	180 [133]	323 [238]	170 [125]	14,6 [32.2]
1 : 3.0	310 [228]	163 [120]	—	—	13,7 [30.2]
1 : 3.4	257 [190]	135 [100]	—	—	15,1 [33.3]
1 : 4.0	224 [165]	118 [87]	—	—	14,8 [32.6]
1 : 4.8	186 [137]	98 [72]	—	—	17,45 [38.5]

* Maximum torque on pump:
C1= maximum starting torque; C2= maximum torque for continuous duty.

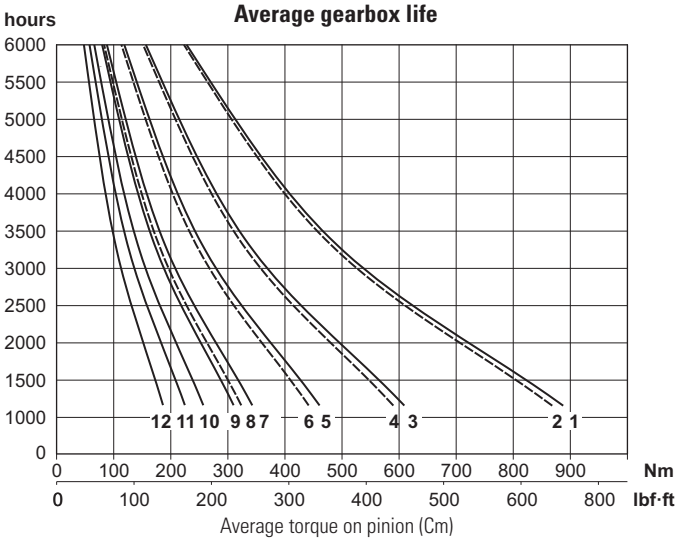

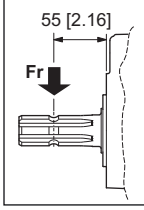

Fr: Maximum radial load on PTO

210 N
47.2 lbf

Oil liters [US gallon]
1.70 [0.45]

Input rpm		Output (transmission ratio) 1 : 1.0	1 : 1.5	1 : 2.0	1 : 2.6	1 : 3.0	1 : 3.4	1 : 4.0	1 : 4.8
540	curve	1	3	5	7	9	10	11	12
	rpm	540	810	1080	1408	1620	1836	2160	2592
1000	curve	2	4	6	8	—	—	—	—
	rpm	1000	1500	2000	2607	—	—	—	—

SPARE PARTS

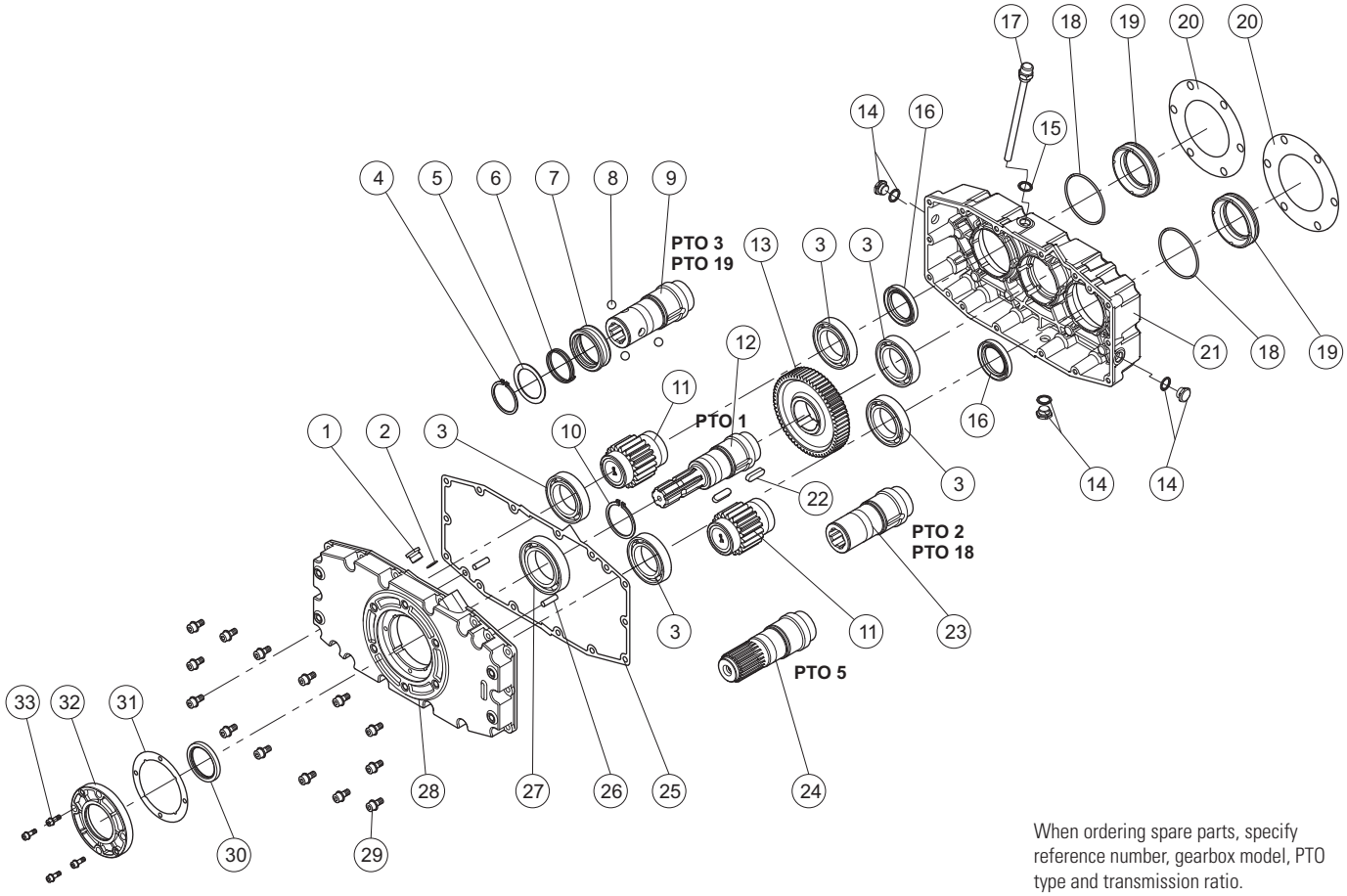

When ordering spare parts, specify reference number, gearbox model, PTO type and transmission ratio.

SPLITTER GEARBOX FOR PUMPS WITH EUROPEAN UNIFIED FLANGE / SAE / ISO

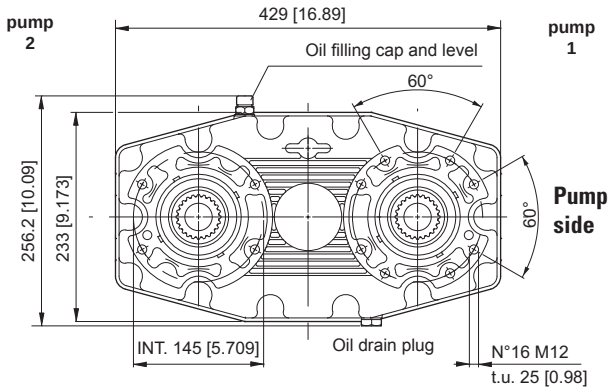

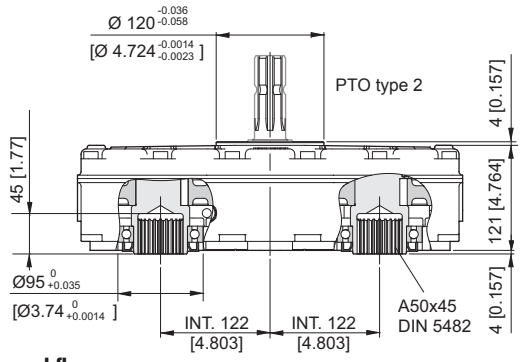

Universal flanges
page 30 - 31

P.T.O.

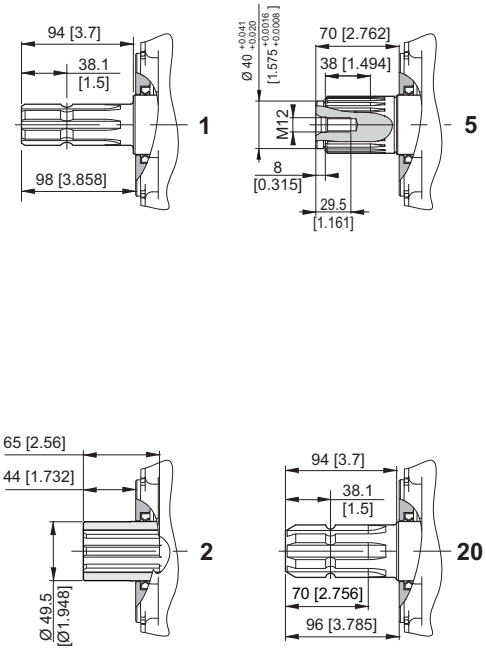

P.T.O. side

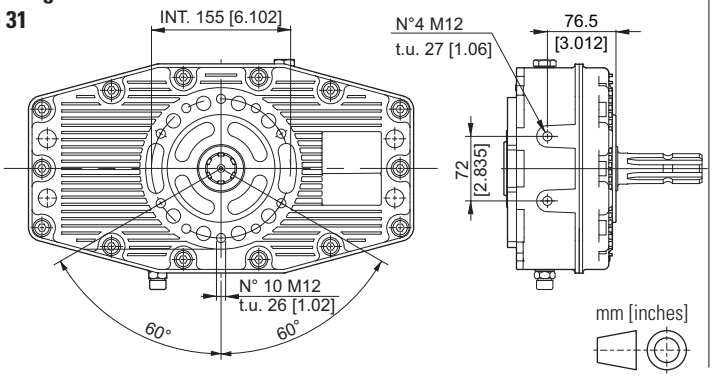

Mounting positions

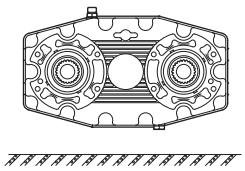

ORDERING CODE

B602 - ** -1/ *** - * * / * *

flange pump 1 — flange pump 2

B602 = Splitter gearbox (aluminium body)

P.T.O.
1 = Male 1" 3/8 DIN 9611
2 = Female 1" 3/8 DIN 9611
5 = Male Z23 DIN 5482
20 = Male 1" 3/4

Coupling for pump to be required to our sales department.

Type (see page 30 - 31)	Flange position 1	2	3	4
D / G				
E / F				
A / B / C / L / M	—			

Transmission ratio

1 = 1 : 1.0	**3** = 1 : 3.0
1,5 = 1 : 1.5	**3,4** = 1 : 3.4
2 = 1 : 2.0	**3,8** = 1 : 3.8
2,6 = 1 : 2.6	

TECHNICAL DATA

Transmission ratio	Maximum torque Nm [lbf·ft] 540 rpm C1*	540 rpm C2*	1000 rpm C1*	1000 rpm C2*	Weight kg [lb]
1 : 1.0	1292 [953]	680 [502]	1193 [880]	628 [463]	17,5 [38,6]
1 : 1.5	1025 [756]	539 [398]	876 [646]	461 [340]	16,2 [35,7]
1 : 2.0	783 [578]	412 [304]	671 [495]	353 [260]	16,1 [35,5]
1 : 2.6	642 [474]	338 [249]	323 [238]	170 [125]	16,1 [35,5]
1 : 3.0	567 [418]	298 [220]	—	—	16,3 [35,9]
1 : 3.4	481 [354]	253 [187]	—	—	16,3 [35,9]
1 : 3.8	399 [294]	210 [155]	—	—	16,3 [35,9]

* Maximum torque on pump:
C1= maximum starting torque; C2= maximum torque for continuous duty.

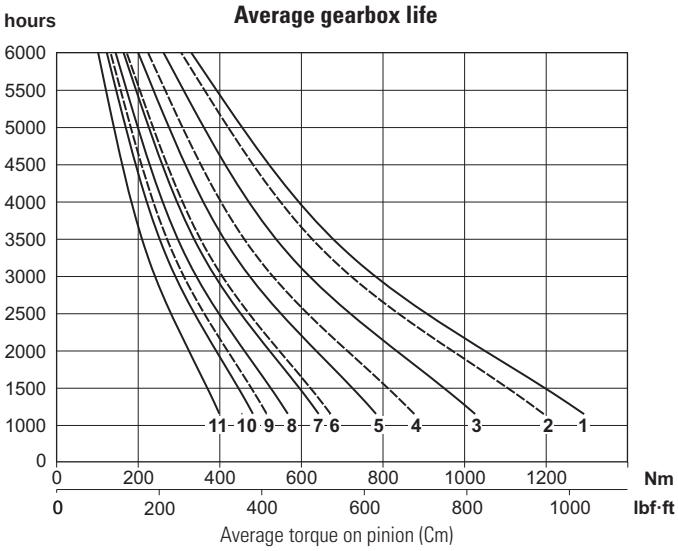

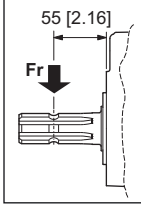

Fr: Maximum radial load on PTO

230 N
51.7 lbf

Oil liters [US gallon]
1.70 [0.45]

Input rpm		Output (transmission ratio) 1 : 1.0	1 : 1.5	1 : 2.0	1 : 2.6	1 : 3.0	1 : 3.4	1 : 3.8
540	curve	1	3	5	7	8	10	11
	rpm	540	810	1080	1408	1620	1836	2030
1000	curve	2	4	6	9	—	—	—
	rpm	1000	1500	2000	2607	—	—	—

SPARE PARTS

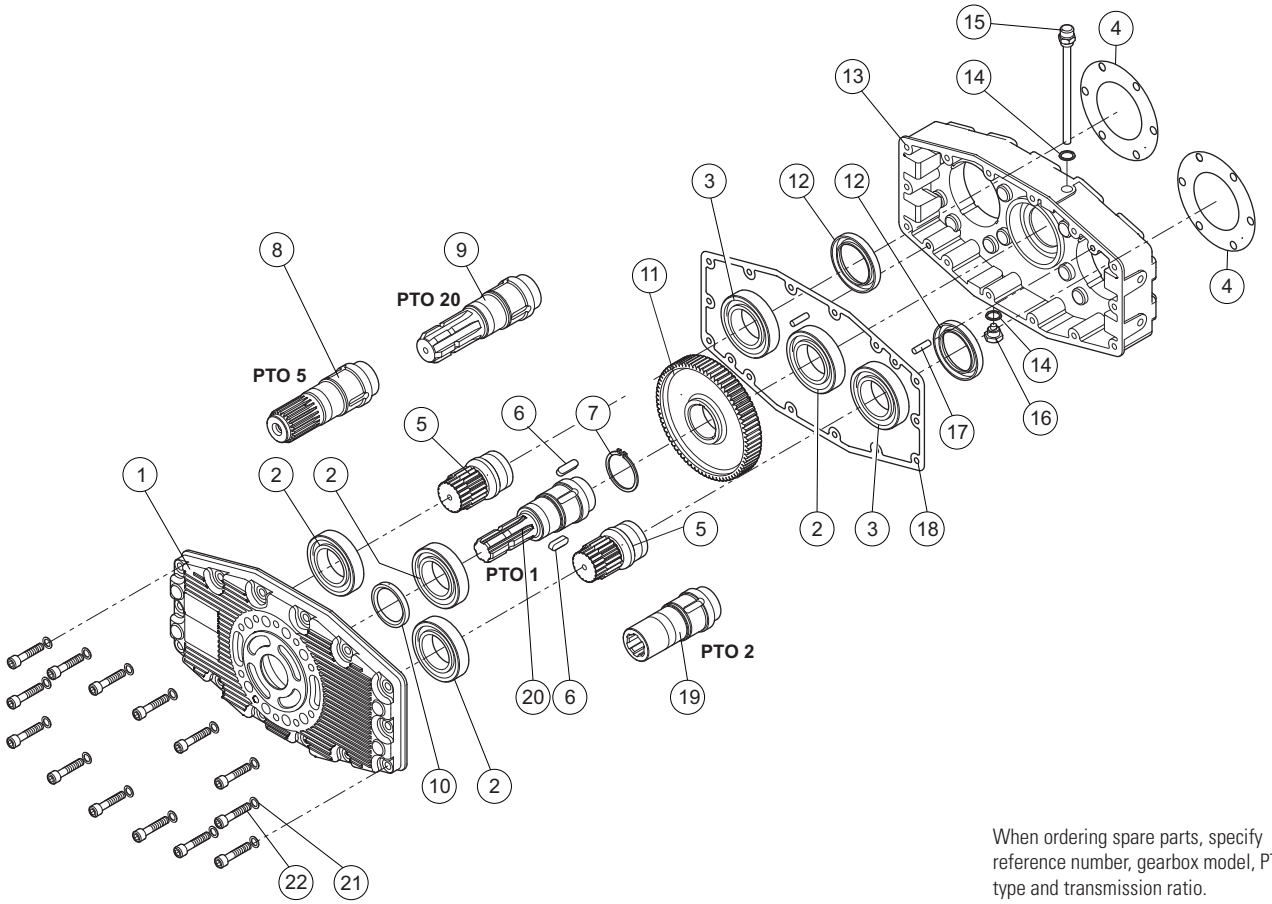

When ordering spare parts, specify reference number, gearbox model, PTO type and transmission ratio.

FLANGES ML52-B502

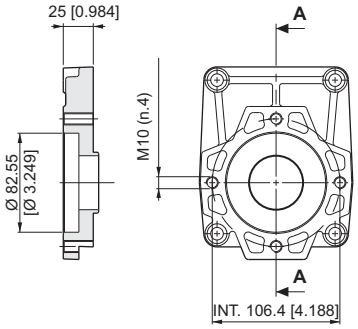

Type "S"
SAE A (2-4 holes) - ML52
Kit flange and screws: 14040004

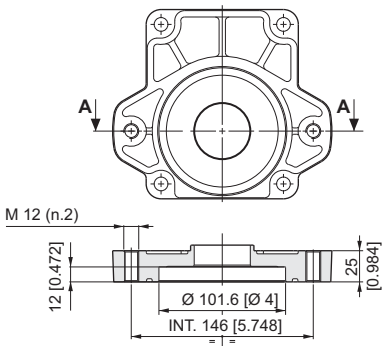

Type "T"
SAE B (2-4 holes) - ML52 - B502
Kit flange and screws: 14040006

UNIVERSAL FLANGES B580 - B600 - B582 - B602

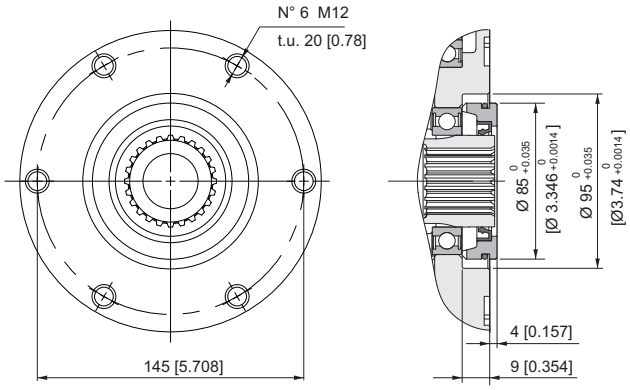

Gearbox
universal flanges

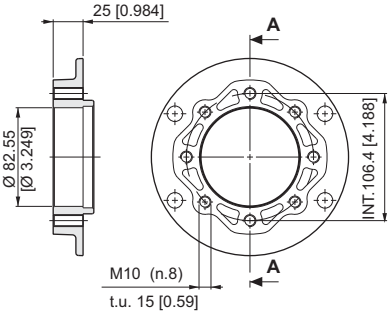

Type "A"
SAE A (2-4 holes)
Kit flange and screws: 14050012

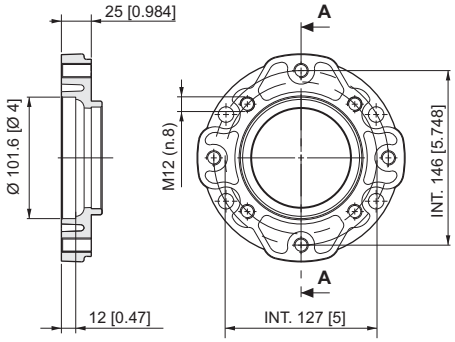

Type "B"
SAE B (2-4 holes)
Kit flange and screws: 14050011

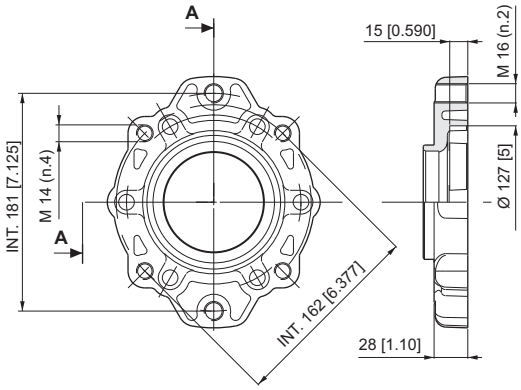

Type "C"
SAE C (2-4 holes)
Kit flange and screws: 14050055

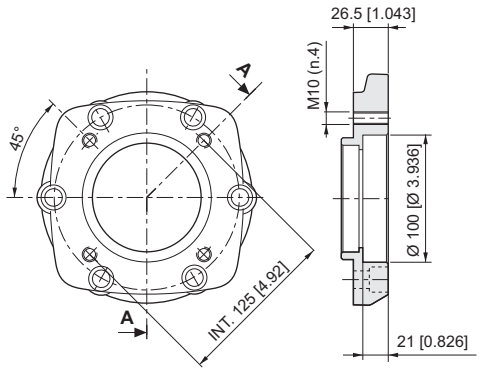

Type "L"
ISO 1
Kit flange and screws: 14050010

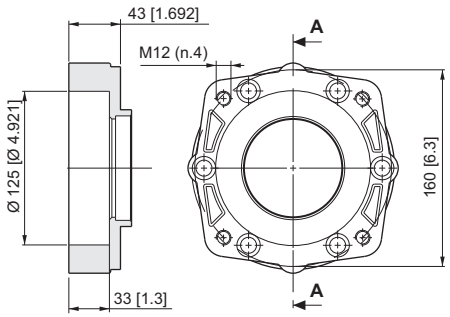

Type "M"
ISO 2
Kit flange and screws: 14050013

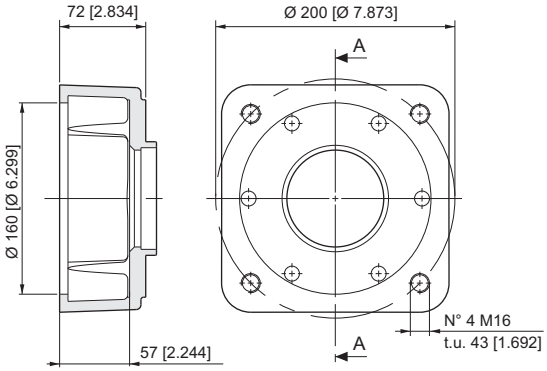

Type "P"
ISO 3
Kit flange and screws: 14050060

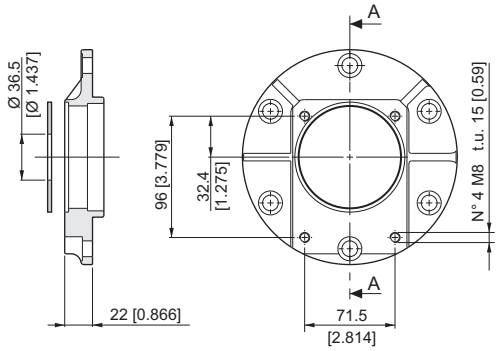

Type "D"
GR 2
Kit flange and screws: 14050008

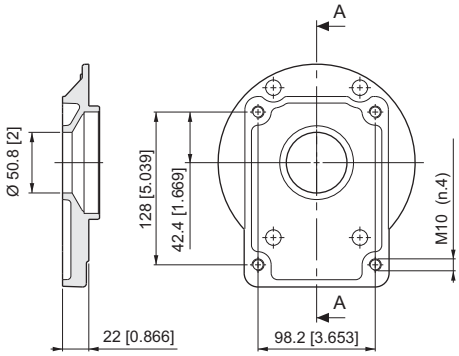

Type "E"
GR 3
Kit flange and screws: 14050005

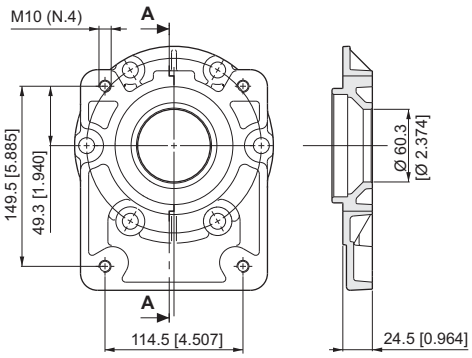

Type "F"
GR 3,5
Kit flange and screws: 14050006

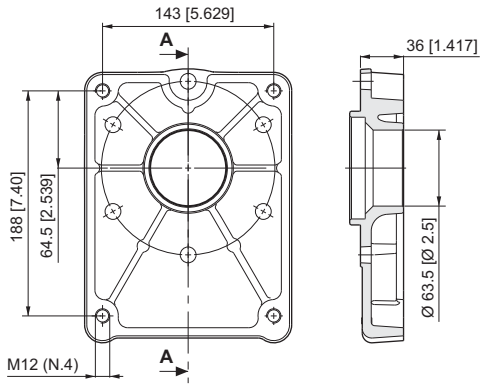

Type "G"
GR 4
Kit flange and screws: 14050062

SPEED REDUCER GEARBOX SAE A

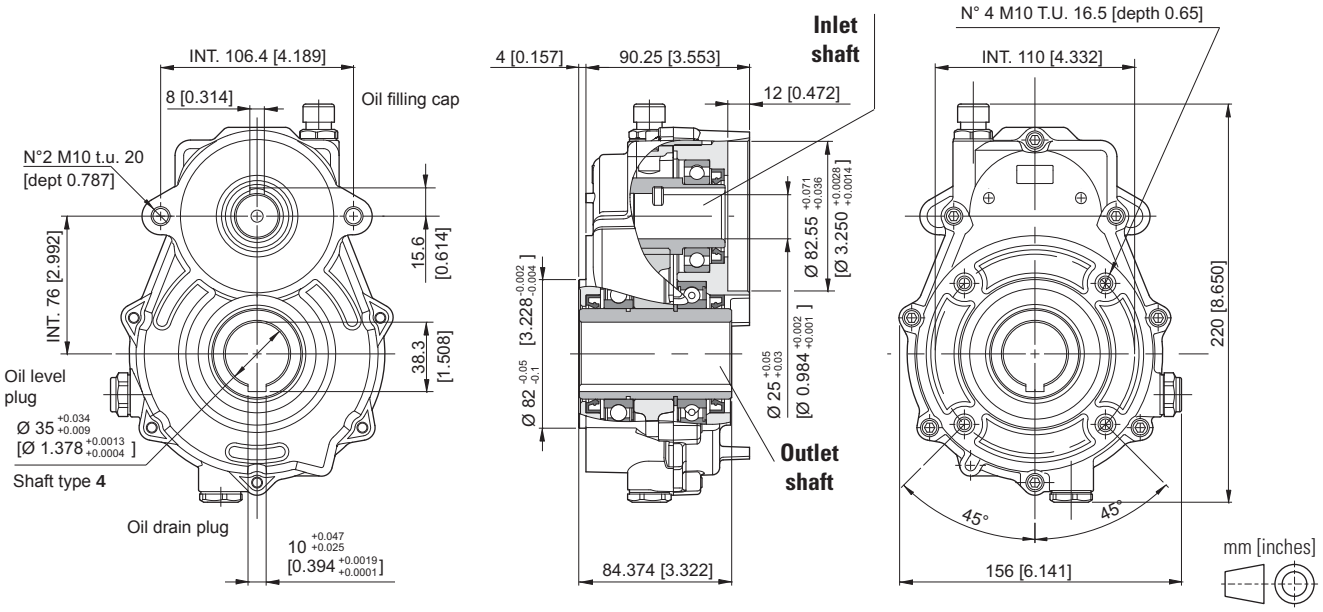

Shaft

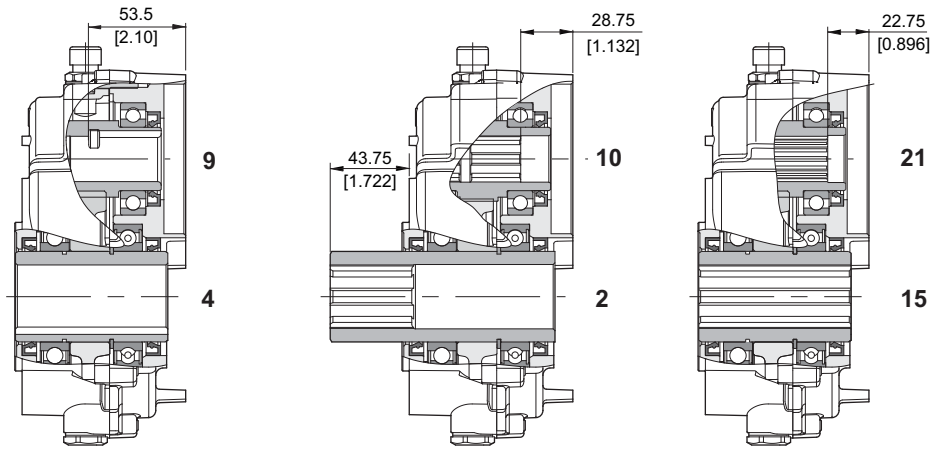

Mounting positions

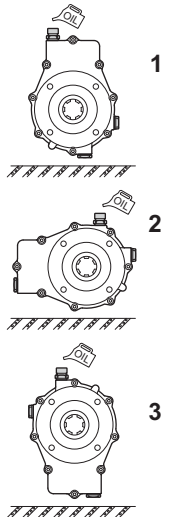

ORDERING CODE

RD33/SAE - ** -1/ *** - ** - *

RD33/SAE = speed reducers (aluminium body)

P.T.O.
2 = Female 1" 3/8 DIN 9611 (long)
4 = Female Ø 35 mm
15 = Female 1" 3/8 DIN 9611 (short)

Transmission ratio
0,66 = 1.5 : 1
0,50 = 2.0 : 1
0,40 = 2.5 : 1
0,33 = 3.0 : 1
0,29 = 3.4 : 1
0,26 = 3.8 : 1

Mounting positions
1 / 2 / 3

Input shaft
9 = Female Ø 25 *
10 = Female SAE 6B
21 = Female Z14 DIN 5482 (25x22)

* Only for transmission ratio: 0,66 - 0,50 - 0,40 - 0,33

Coupling to the hydraulic motor to be required at our sales department.

TECHNICAL DATA

Transmission ratio	Maximum torque Nm [lbf·ft] 200 rpm C1*	C2*	Weight kg [lb]
0.66	236 [174]	124 [91]	4,3 [9.5]
0.50	158 [117]	83 [61]	4,4 [9.7]
0.40	139 [103]	73 [54]	4,3 [9.5]
0.33	121 [89]	64 [47]	4,4 [9.7]
0.29	114 [84]	60 [44]	4,7 [10.4]
0.26	88 [65]	46 [34]	4,4 [9.7]

* Maximum torque on pump:
C1= maximum starting torque; C2= maximum torque for continuous duty.

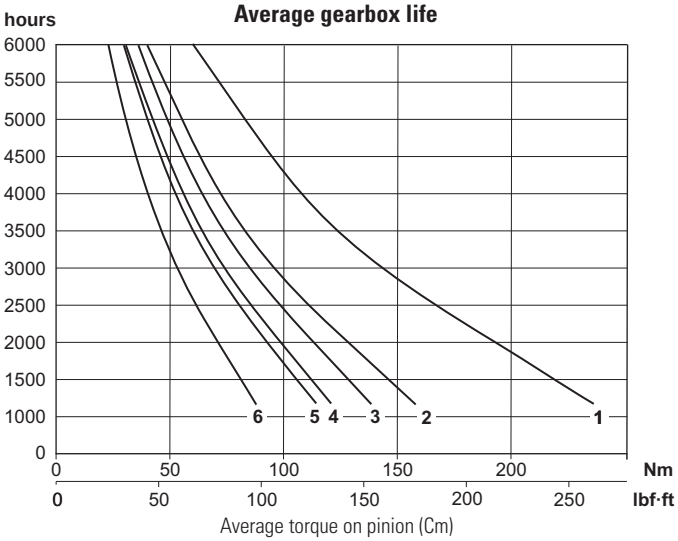

Mounting positions	Oil liters [US gallon]
1	0.15 [0.04]
2	0.11 [0.03]
3	0.09 [0.02]

Output rpm		Input (transmission ratio) 0.66	0.50	0.40	0.33	0.29	0.26
200	curve	1	2	3	4	5	6
	rpm	300	400	500	600	700	760

SPARE PARTS

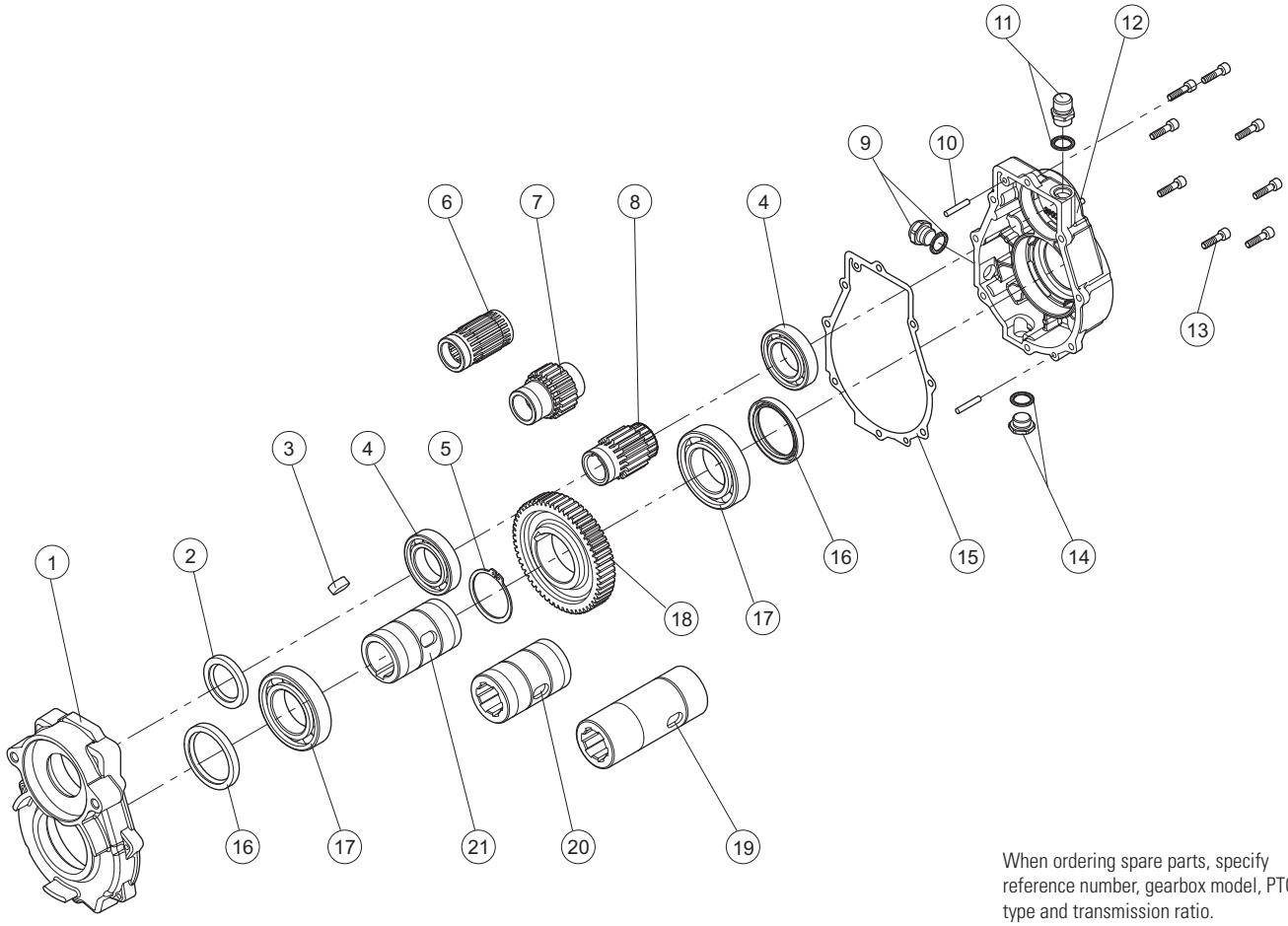

When ordering spare parts, specify reference number, gearbox model, PTO type and transmission ratio.

SPEED REDUCER GEARBOX SAE A

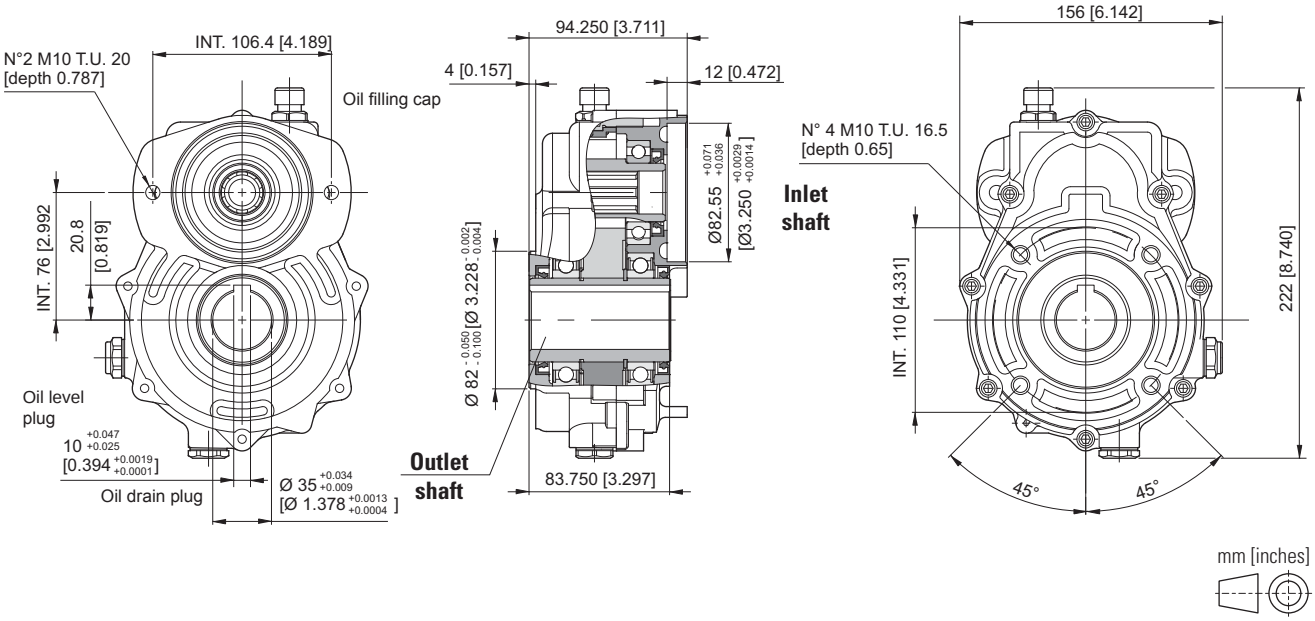

Inlet shaft

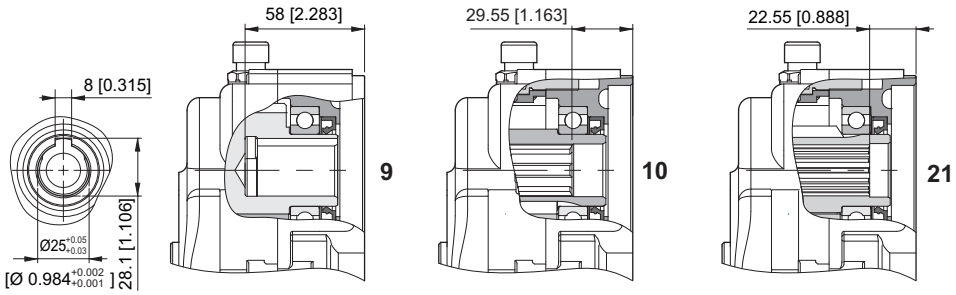

Mounting positions

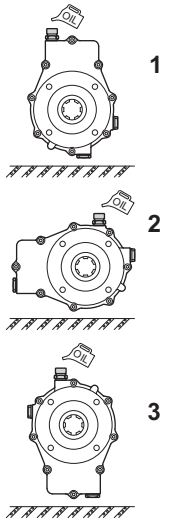

ORDERING CODE

RD42/SAE - * -1/ *** - ** - *

RD42/SAE = Speed reducers (cast iron body)

Output shaft
4 = Female Ø 35 mm

Transmission ratio
0,66 = 1.5 : 1
0,33 = 3.0 : 1
0,29 = 3.4 : 1

Mounting positions
1 / 2 / 3

Input shaft
9 = Female Ø 25 *
10 = Female SAE 6B
21 = Female Z14 DIN 5482 (25x22)

* Only for transmission ratio: 0,66 - 0,50 - 0,40 - 0,33

Coupling for pump to be required to our sales department.

TECHNICAL DATA

Transmission ratio	Maximum torque Nm [lbf·ft] 200 rpm C1*	C2*	Weight kg [lb]
0.66	289 [213]	152 [112]	7,8 [17.2]
0.33	142 [105]	75 [55]	8,3 [18.3]
0.29	133 [98]	70 [52]	8,5 [18.7]

* Maximum torque on pump:
C1= maximum starting torque; C2= maximum torque for continuous duty.

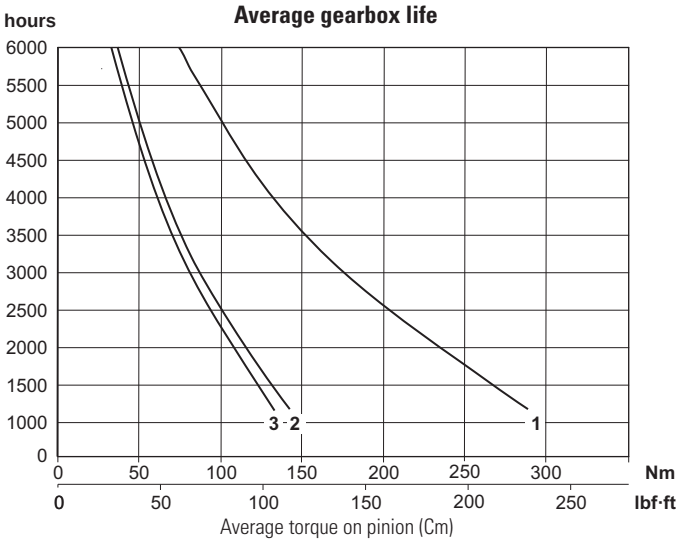

Mounting positions	Oil liters [US gallon]
1	0.15 [0.04]
2	0.11 [0.03]
3	0.09 [0.02]

Output rpm		Input (transmission ratio) 0.66	0.33	0.29
200	curve	1	2	3
	rpm	300	600	700

SPARE PARTS

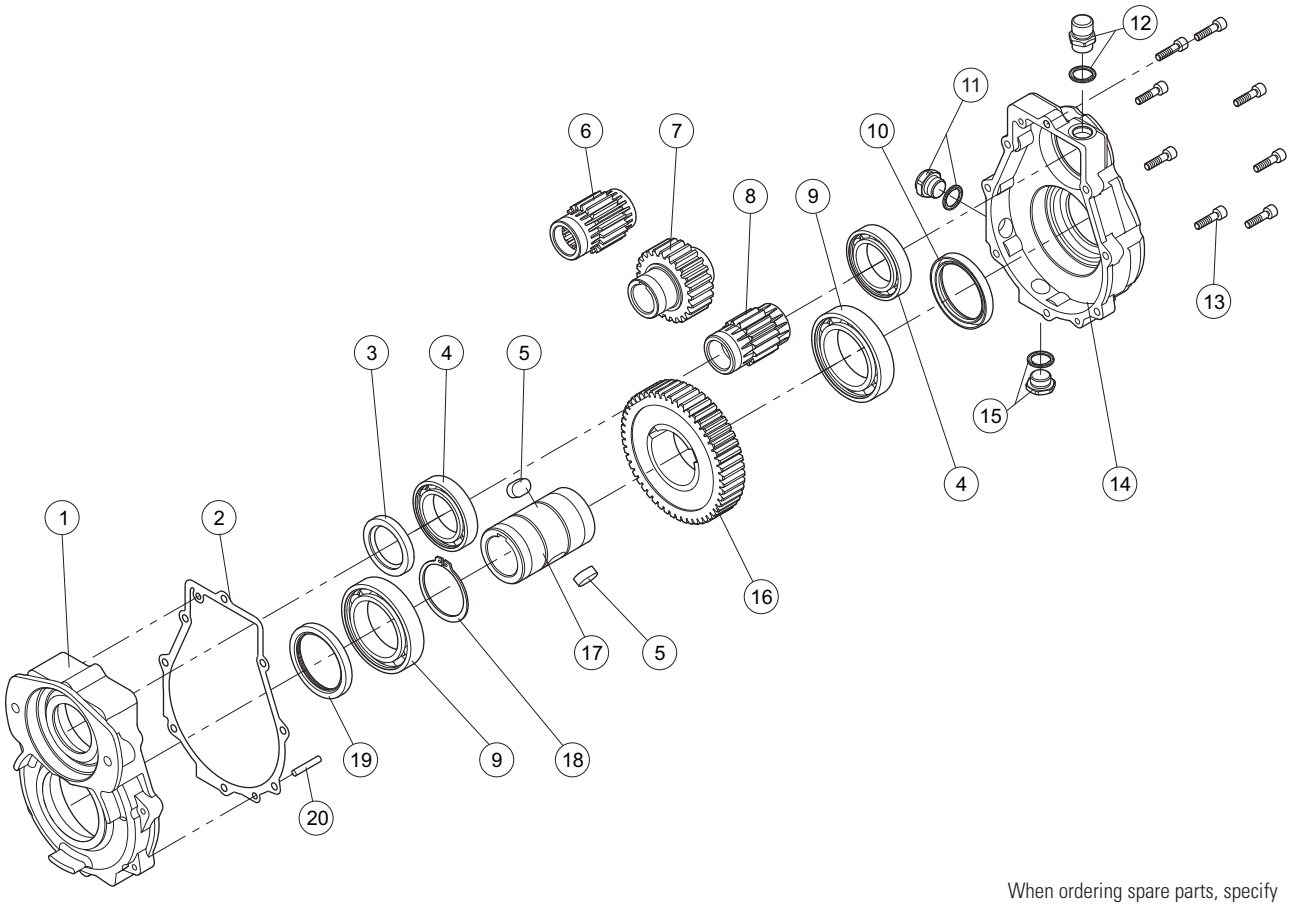

When ordering spare parts, specify reference number, gearbox model, PTO type and transmission ratio.

SPEED REDUCER GEARBOX SAE A/B

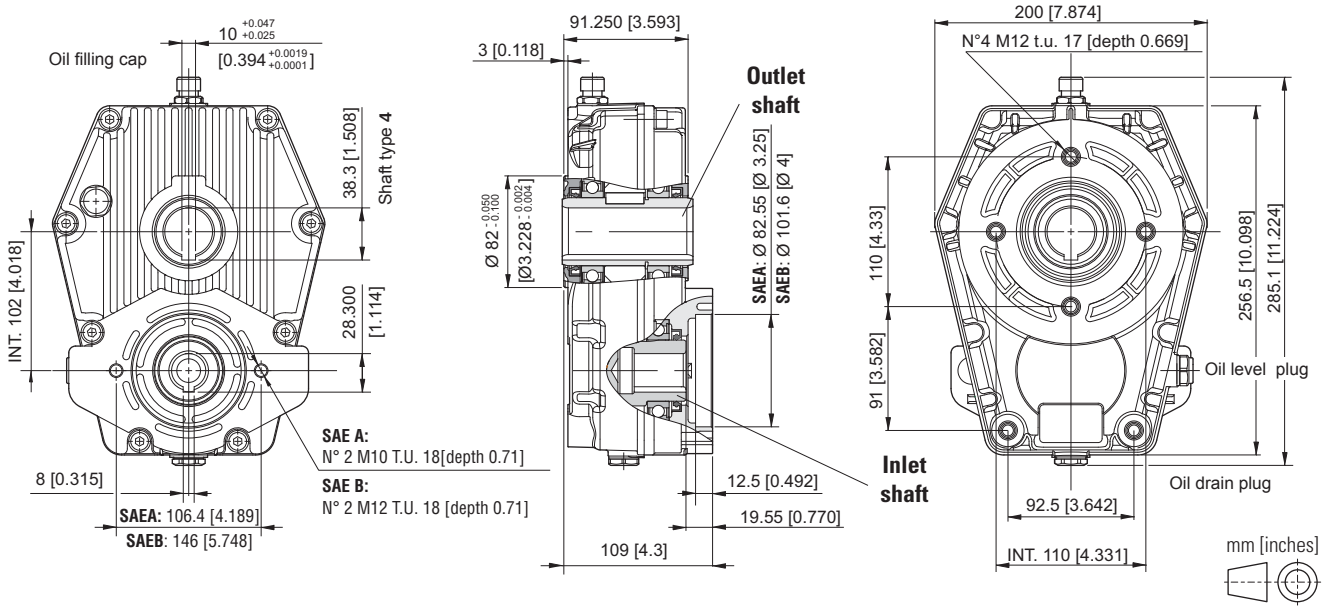

Shaft

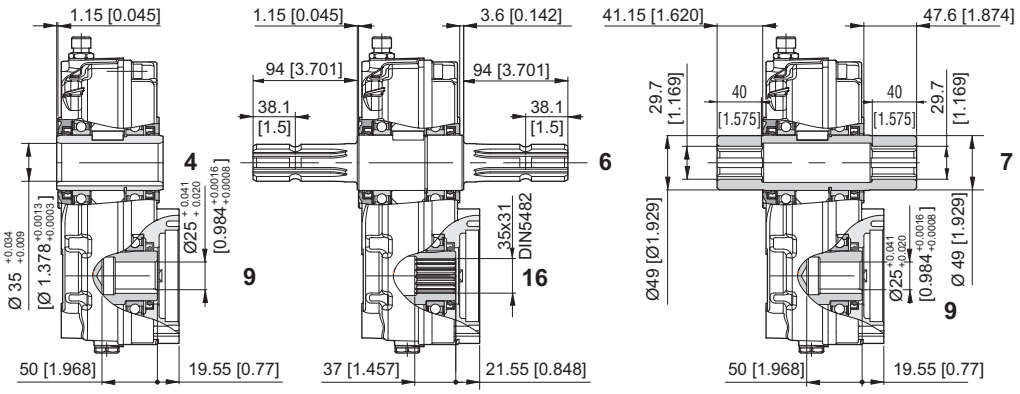

Mounting positions

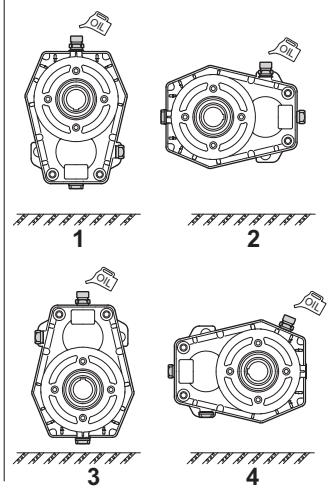

ORDERING CODE

RD52/SAE* - * -1/ *** - ** - *

RD52/SAE A = Speed reducers (aluminium body)
RD52/SAE B = Speed reducers (aluminium body)

Output shaft
4 = Female Ø 35 mm
6 = Male/Male 1" 3/8 DIN 9611
7 = Female/Female 1" 3/8 DIN 9611

Transmission ratio
0,66 = 1.5 : 1
0,50 = 2.0 : 1
0,38 = 2.6 : 1
0,33 = 3.0 : 1
0,29 = 3.4 : 1
0,26 = 3.8 : 1

Mounting positions
1 / 2 / 3 / 4

Input shaft
9 = Female Ø 25
16 = Female Z18 DIN 5482 (35x31)

Coupling for pump to be required to our sales department.

TECHNICAL DATA

Transmission ratio	Maximum torque Nm [lbf·ft] 200 rpm C1*	C2*	Weight kg [lb]
0.66	608 [448]	320 [236]	9,5 [20.9]
0.50	460 [339]	242 [178]	7,9 [17.4]
0.38	397 [293]	209 [154]	8,3 [18.3]
0.33	359 [265]	189 [139]	8,2 [18.1]
0.29	298 [220]	157 [116]	8,8 [19.4]
0.26	261 [193]	137 [101]	7,9 [17.4]

* Maximum torque on pump:
C1= maximum starting torque; C2= maximum torque for continuous duty.

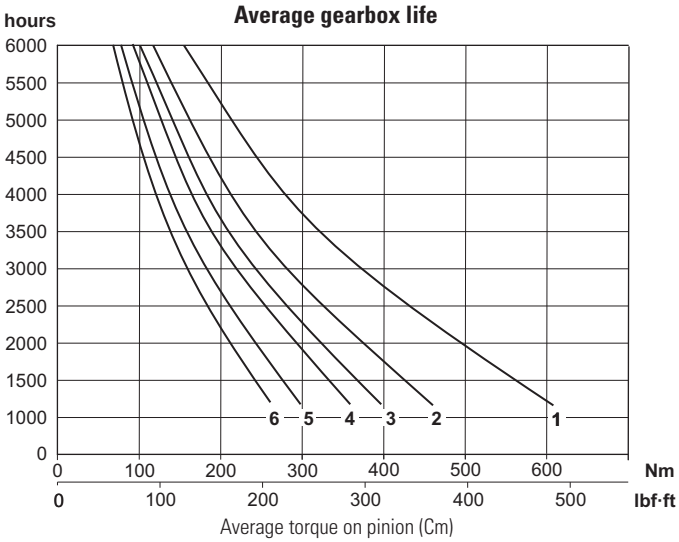

Mounting positions	Oil liters [US gallon]
1	0.34 [0.09]
2	0.80 [0.21]
3	0.52 [0.14]
4	0.75 [0.20]

Output rpm		Input (transmission ratio) 0.66	0.50	0.38	0.33	0.29	0.26
200	curve	1	2	3	4	5	6
	rpm	300	400	500	600	680	760

SPARE PARTS

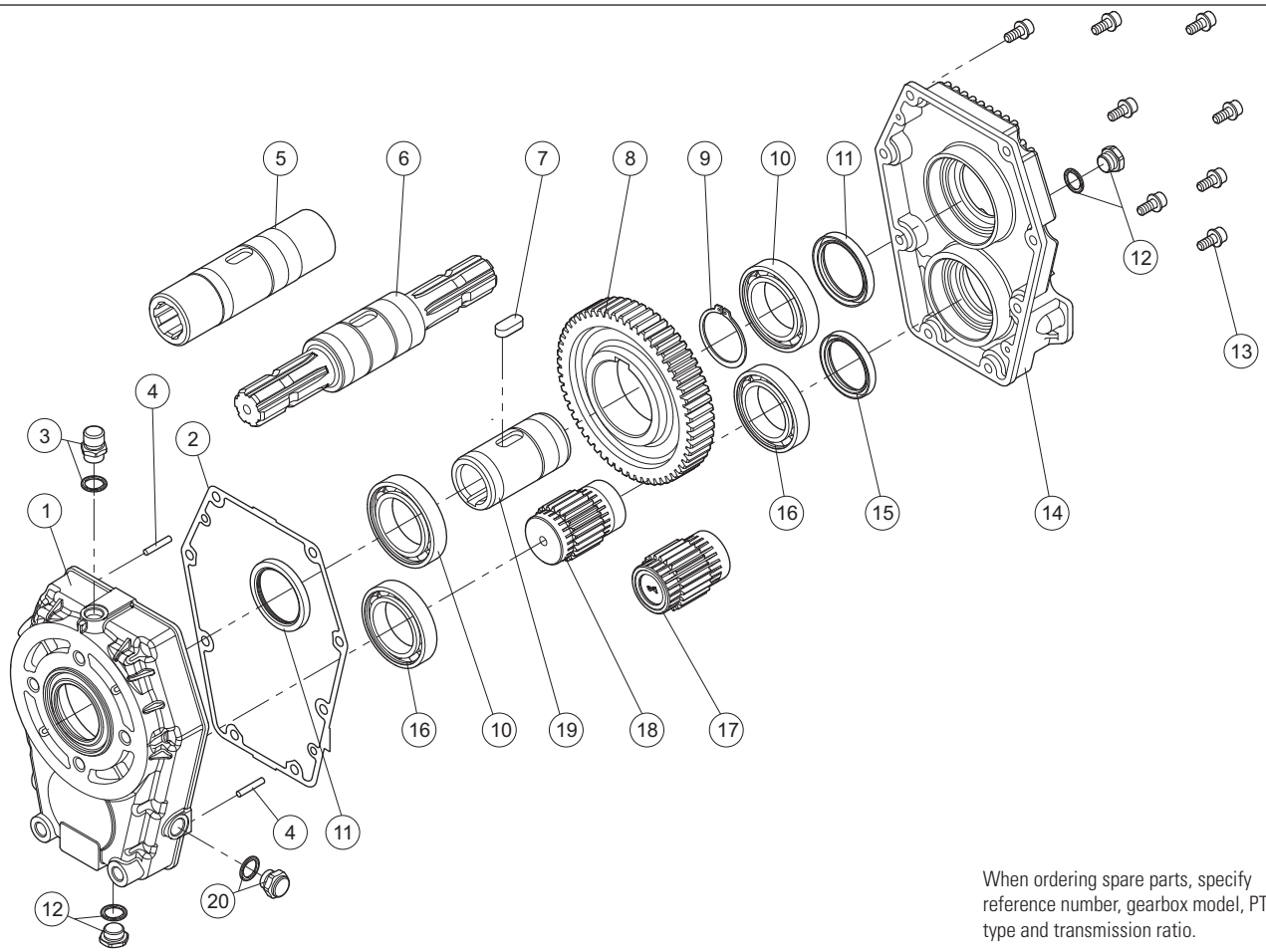

When ordering spare parts, specify reference number, gearbox model, PTO type and transmission ratio.

SPEED REDUCER GEARBOX SAE A/B

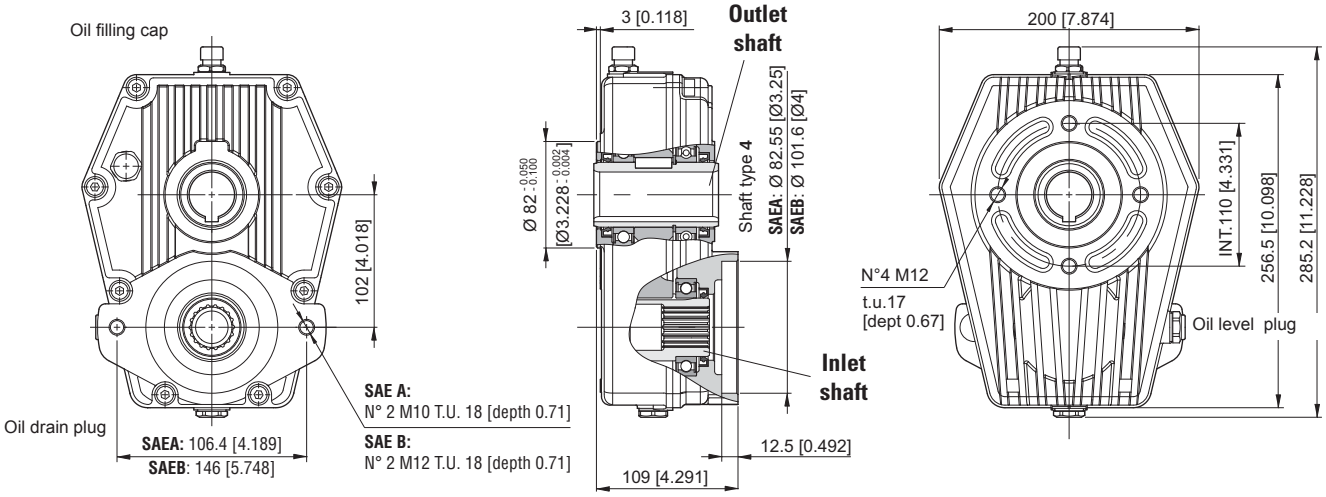

mm [inches]

Shaft

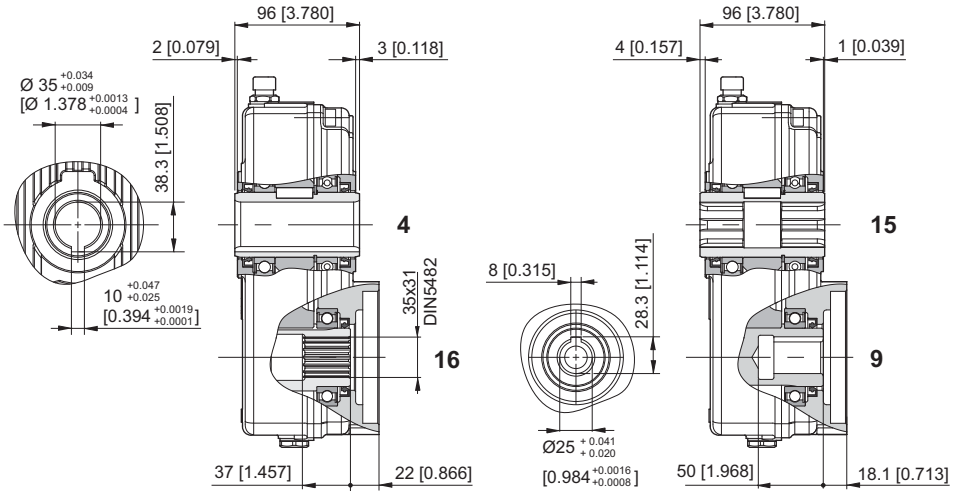

Mounting positions

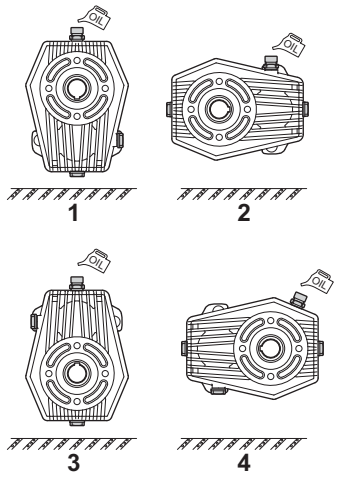

ORDERING CODE

RD62/SAE* - ** -1/ *** - ** - *

RD62/SAE A = Speed reducers (cast iron body)
RD62/SAE B = Speed reducers (cast iron body)

Output shaft
4 = Female Ø 35 mm
15 = Female 1" 3/8 DIN 9611 (short)

Coupling for pump to be required to our sales department.

Mounting positions
1 / 2 / 3 / 4

Input shaft
9 = Female Ø 25
16 = Female Z18 DIN 5482 (35x31)

Transmission ratio
0,66 = 1.5 : 1
0,50 = 2.0 : 1
0,38 = 2.6 : 1
0,33 = 3.0 : 1
0,29 = 3.4 : 1
0,26 = 3.8 : 1

TECHNICAL DATA

Transmission ratio	Maximum torque Nm [lbf·ft] 200 rpm C1*	C2*	Weight kg [lb]
0.66	608 [448]	320 [236]	9,5 [20.9]
0.50	460 [339]	242 [178]	7,9 [17.4]
0.38	397 [293]	209 [154]	8,3 [18.3]
0.33	359 [265]	189 [139]	8,2 [18.1]
0.29	298 [220]	157 [116]	8,8 [19.4]
0.26	261 [193]	137 [101]	7,9 [17.4]

* Maximum torque on pump:
C1= maximum starting torque; C2= maximum torque for continuous duty.

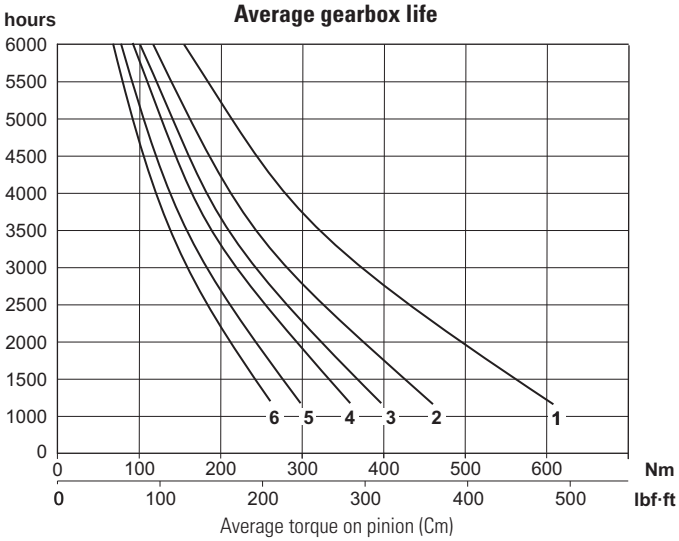

Mounting positions	Oil liters [US gallon]
1	0.34 [0.09]
2	0.80 [0.21]
3	0.52 [0.14]
4	0.75 [0.20]

Output rpm		Input (transmission ratio) 0.66	0.50	0.38	0.33	0.29	0.26
200	curve	1	2	3	4	5	6
	rpm	300	400	500	600	680	760

SPARE PARTS

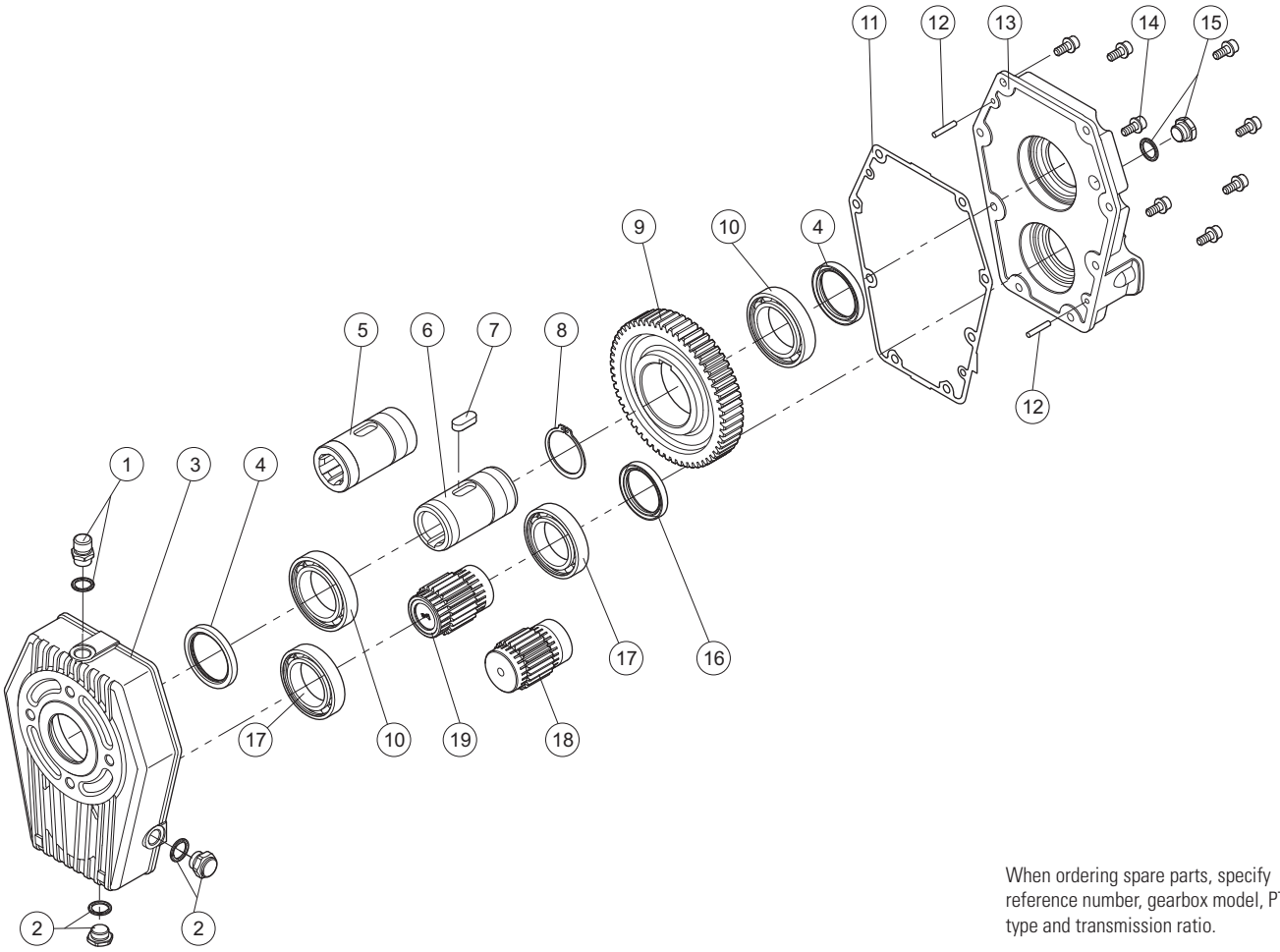

When ordering spare parts, specify reference number, gearbox model, PTO type and transmission ratio.

SPEED REDUCER GEARBOX WITH PTO FOR UNIFIED GR.2/3 PUMPS

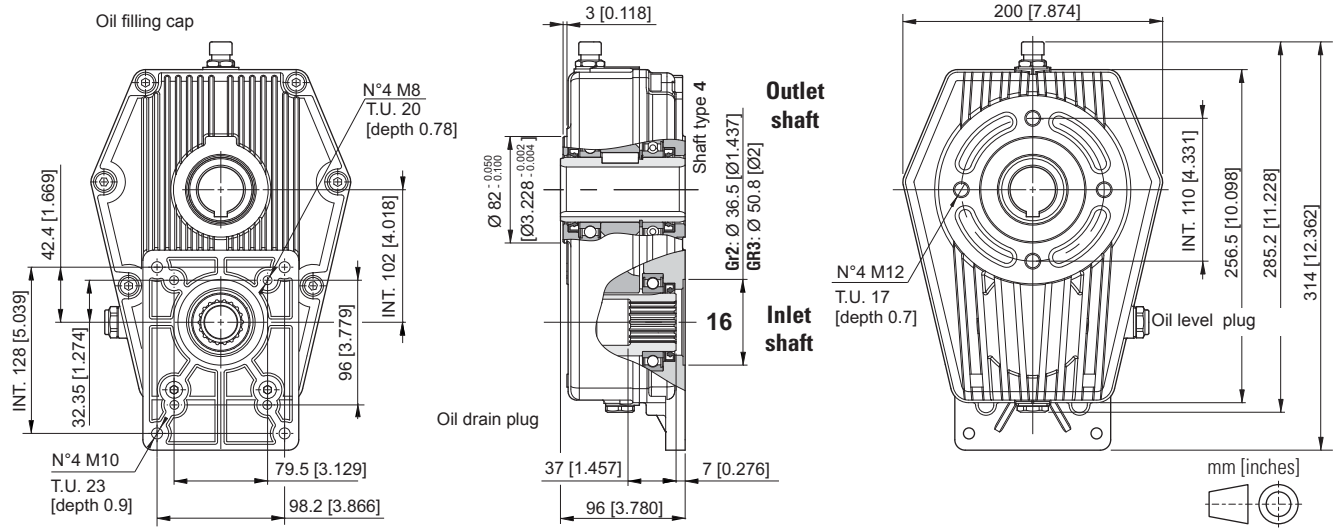

Outlet shaft

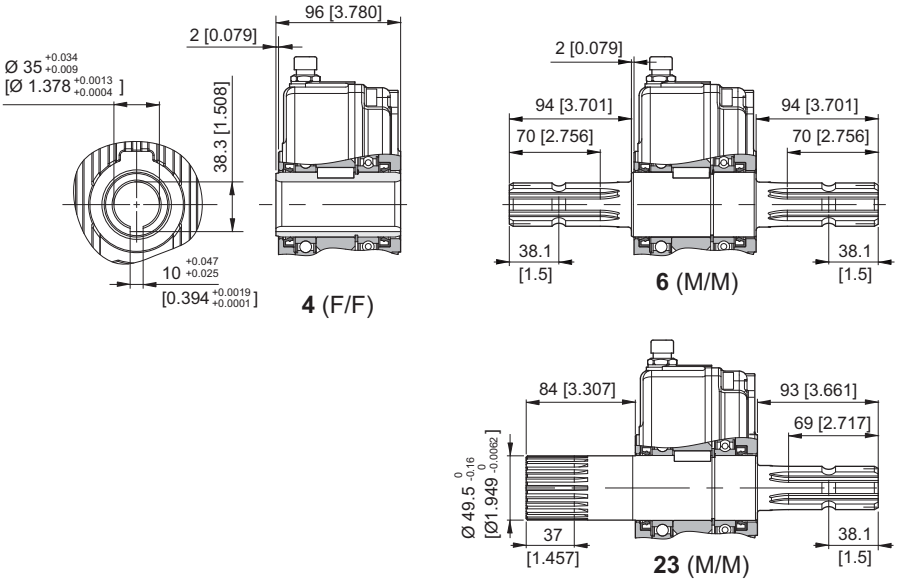

Mounting positions

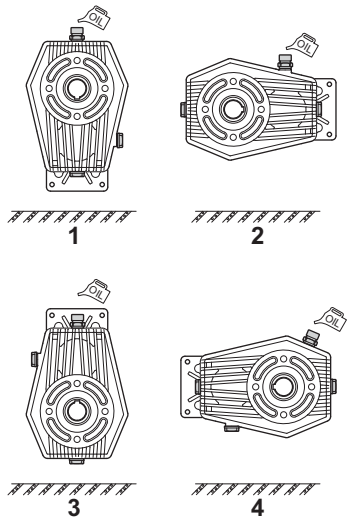

ORDERING CODE

RD62/B - ** -1/ *** - ** - *

RD62/B = Speed reducers (cast iron body)

Output shaft
4 = Female Ø 35 mm
6 = Male/Male 1" 3/8 DIN 9611
23 = Male 50x45 Z=24 DIN 5482
Male 1" 3/8 DIN 9611

Coupling for pump to be required to our sales department.

Mounting positions
1 / 2 / 3 / 4

Input shaft
16 = Female Z18 DIN 5482

Transmission ratio
0,50 = 2.0 : 1
0,33 = 3.0 : 1
0,29 = 3.4 : 1

TECHNICAL DATA

Transmission ratio	Maximum torque Nm [lbf·ft] 200 rpm C1*	C2*	Weight kg [lb]
0.50	460 [339]	242 [178]	14 [30,9]
0.33	359 [265]	189 [139]	14 [30,9]
0.29	298 [220]	157 [116]	14 [30,9]

* Maximum torque on pump:
C1= maximum starting torque; C2= maximum torque for continuous duty.

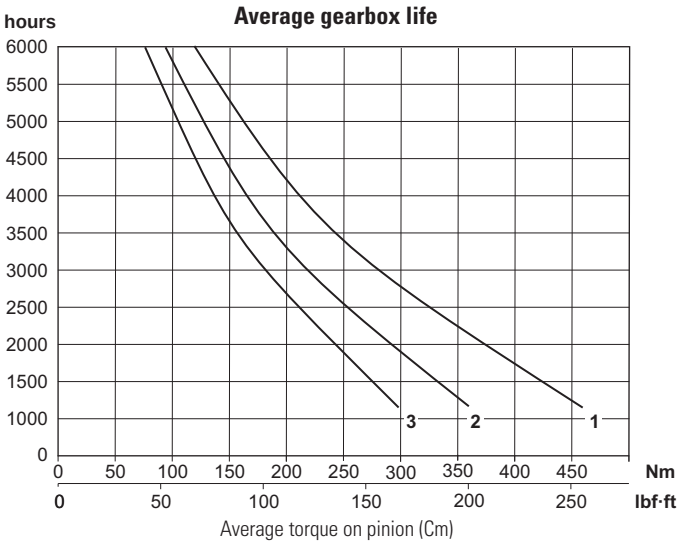

Mounting positions	Oil liters [US gallon]
1	0.34 [0.09]
2	0.80 [0.21]
3	0.52 [0.14]
4	0.75 [0.20]

Output rpm		Input (transmission ratio) 0.50	0.33	0.29
200	curve	1	2	3
	rpm	400	600	680

SPARE PARTS

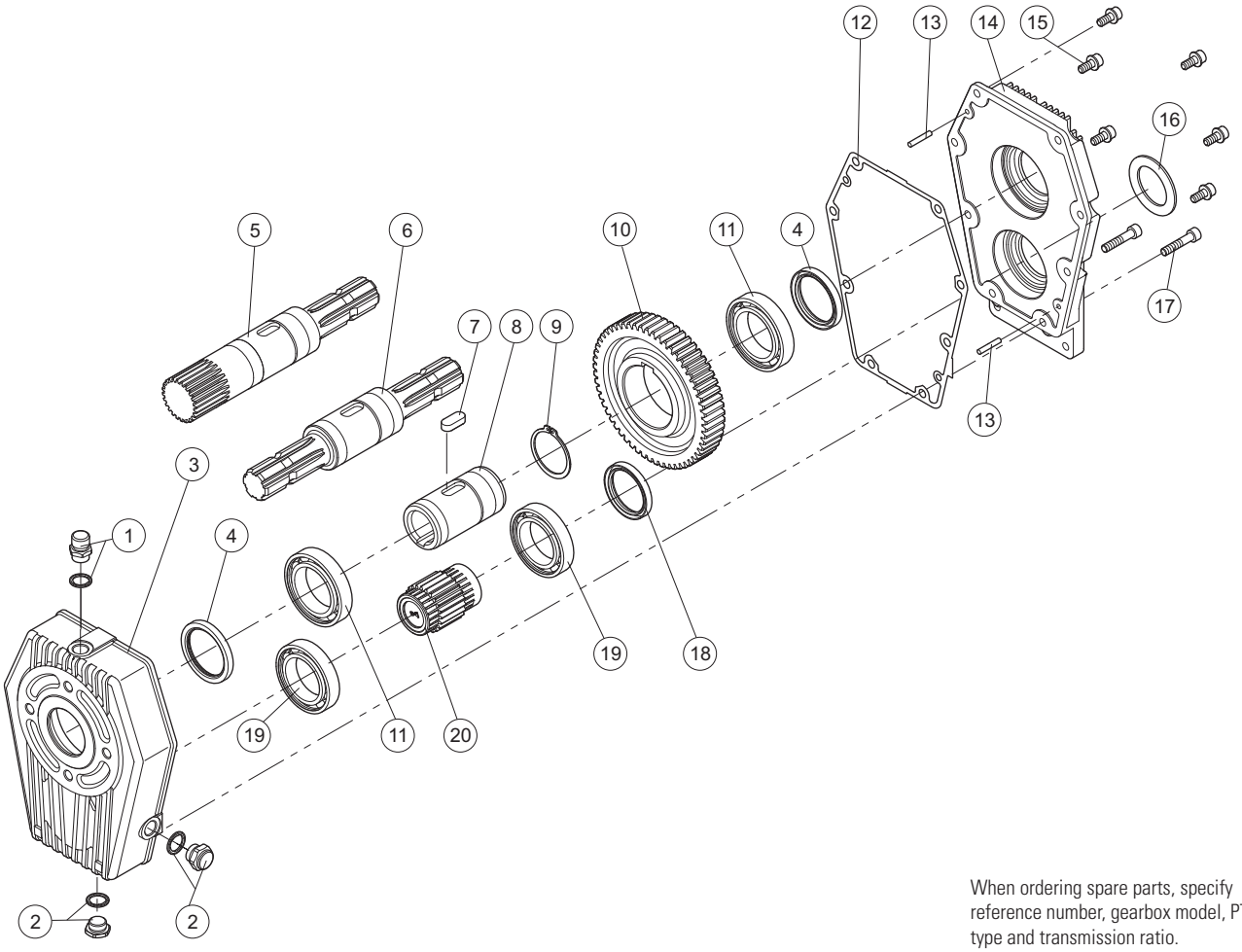

When ordering spare parts, specify reference number, gearbox model, PTO type and transmission ratio.

Note

Note

Note

Code DOC00071 - Rev. 03

Dana Brevini S.p.A.
Via Luciano Brevini 1/a
42124 Reggio Emilia
Tel. +39 0522 270711
Fax +39 0522 270660
www.dana.com/brevini
info@brevinifluidpower.com